SKT

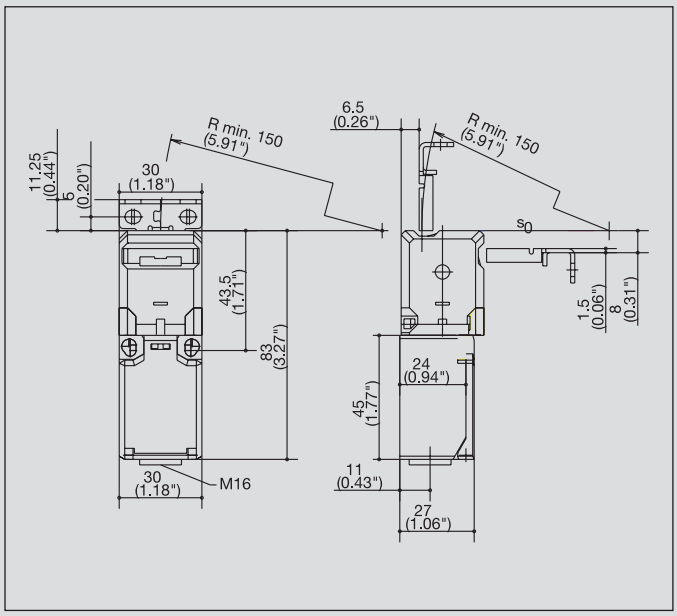

Safety switches with separate actuator are positive opening position switches. In terms of design, the switching element and actuator are separated. On actuation, the switching element and actuator are either brought together or separated. The positive opening NC contact is always open when the actuator is withdrawn. These switches are assigned to Type 2.

BERNSTEIN offers various versions of these Type 2 switches. The differences and advantages of the individual switch groups are outlined in the following.

The SKT is the smallest safety switch with a separate actuator. It is particularly suited for applications that require an extremely slim and short switch design. Its rotary head, two actuator openings and various switching functions underscore its versatility in extremely confined spaces.

Added to this, the SKT features other options to meet any requirements:

- **Integrated eject function (FE):**
  The actuator is ejected if the door is not locked securely. Consequently, the safety contact is opened, thus preventing the machine from starting up. In addition, this function makes it apparent that the door still needs to be locked.

- **Actuating force (up to 50 N):**
  The standard actuating force is 10 N. Depending on the switch variant, an actuating force of 50 N can also be selected. In many applications, hatches and doors need to be secured to prevent them being opened unintentionally. This is achieved by means of bolts, fasteners or other latching mechanisms. The SKI safety switch should be selected for applications requiring increased actuating force.

- **Universal Hinged Actuator (MRU):**
  The MRU actuator is ideally suited for applications where the installation conditions severely restrict the actuating travel or radius. It has an adjustable actuating radius in the horizontal and vertical plane.

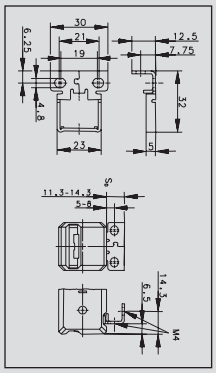

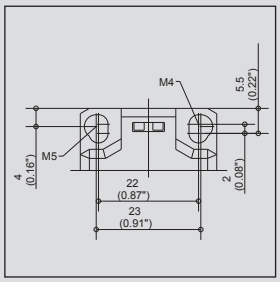

R_{min} 150 mm
Actuating forces FE to FI50

Technical data

Electrical data		
Rated insulation voltage	U_i max.	250 V
Rated operating voltage	U_e max.	240 V AC
Conventional thermal current	I_{the}	10 A
Utilization category		AC-15, U_e/I_e 240 V / 3 A; DC-13, U_e/I_e 250 V / 0.27 A
Mechanical data		
Switching frequency		≤ 30/min
Mechanical service life Standard Mechanical service life encreased actuator holding force		1 x 10^6 switching cycles 1 x 10^5 switching cycles
B10d (up to) ①		2 Mill.
Short-circuit protection		Fuse 6 A gL/gG
Protection class		II, Insulated
Ambient temperature		–30 °C to + 80 °C
Protection class		IP 65 conforming to IEC/EN 60529
Type of connection		Screw connections
Conductor cross sections		Single-wire 0.5 – 1.5 mm^2 or Stranded wire with ferrule 0.5 – 1.5 mm^2
Enclosure		Thermoplastic, glass fibre-reinforced (UL94-V0)
Cable entry		M16 x 1.5
Standards		
VDE 0660 T100, DIN EN 60947-1, IEC 60947-1 VDE 0660 T200, DIN EN 60947-5-1, IEC 60947-5-1		

① Depending on switching system. See Table on Pages 70 – 73.

SKI

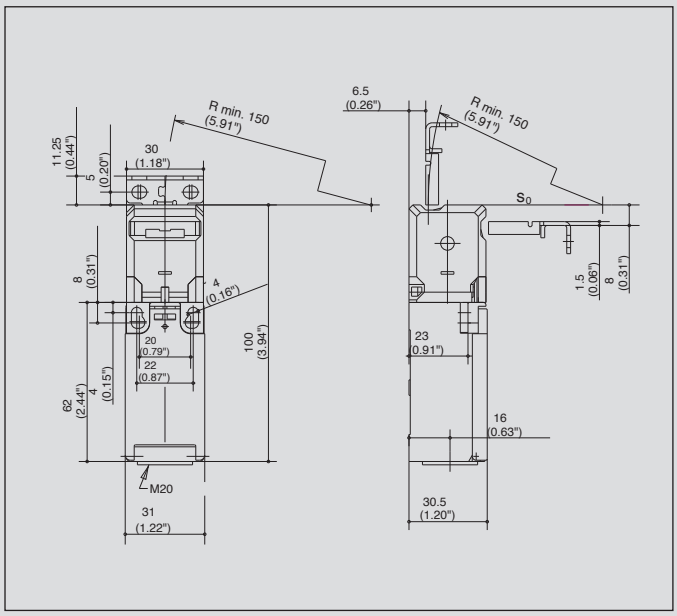

The SKI is the slimline version of a safety switch with a separate actuator. It is based on the BERNSTEIN I88 family. Its dimensions, not including the actuating head, correspond to EN 50047.

The actuating head is rotary mounted and has two actuator openings. The SKI safety switch is predestined for installation on section structures and in applications with confined installation conditions. Compared to the SKT, it offers more connection space for the wiring and variants with up to three switching contacts available.

Other advantages of this series include:

- **Integrated eject function (FE):**

  The actuator is ejected if the door is not locked securely. Consequently, the safety contact is opened, thus preventing the machine from starting up. In addition, this function makes it apparent that the door still needs to be locked.

- **Actuating force (up to 50 N):**

  The standard actuating force is 10 N. Depending on the switch variant, an actuating force of 50 N can also be selected. In many applications, hatches and doors need to be secured to prevent them from being opened unintentionally. This is achieved by means of bolts, fasteners or other latching mechanisms. The SKI safety switch should be selected for applications requiring increased actuating force.

- **Universal radius actuator (MRU):**

  The MRU actuator is ideally suited for applications where the installation conditions severely restrict the actuating travel or radius. It has an adjustable actuating radius in the horizontal and vertical plane.

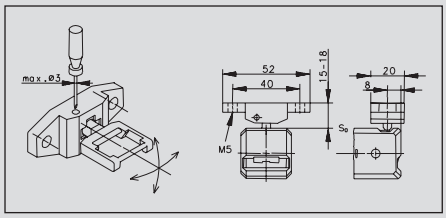

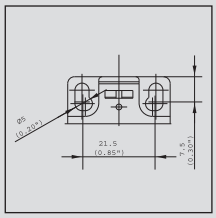

R_{min} in setting directions 50 mm
Actuating forces FE to FI50

Technical data

Electrical data		
Rated insulation voltage	U_i max.	250 V AC
Rated operating voltage	U_e max.	240 V
Conventional thermal current (up to) ①	I_{the}	10 A
Utilization category (up to) ①		AC-15, U_e /I_e 240 V / 3 A
Mechanical data		
Switching frequency		≤ 30/min.
Mechanical service life Standard Mechanical service life encreased actuator holding force		1 x 10^6 switching cycles 1 x 10^5 switching cycles
B10d (up to) ①		2 Mill.
Short-circuit protection		Fuse 6 A gL/gG
Protection class		II, Insulated
Ambient temperature		–30 °C to + 80 °C
Protection class		IP 65 conforming to IEC/EN 60529
Type of connection		Screw connections
Conductor cross sections		Single-wire 0.5 – 1.5 mm^2 or Stranded wire with ferrule 0.5 – 1.5 mm^2
Enclosure		Thermoplastic, glass fibre-reinforced (UL94-V0)
Cable entry		1 x M20 x 1.5
Standards		
VDE 0660 T100, DIN EN 60947-1, IEC 60947-1 VDE 0660 T200, DIN EN 60947-5-1, IEC 60947-5-1		

① Depending on switching system. See Table on Pages 70 – 73.

SK

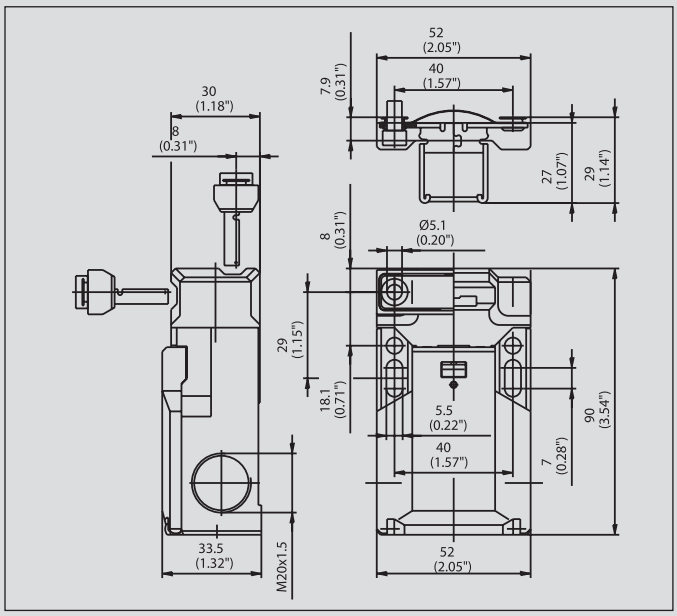

The SK safety position switch is an industry standard and can be used in virtually any application.

Thanks to design safety features conforming to VDE 0660 T200, IEC 60947-5-1 and the test regulations GS-ET 15, the SK is particularly suitable for personal protection applications. Its versatility is enhanced by the variable actuator head and two actuator openings.

Other decisive advantages include:

- **Different actuating forces:**

  Corresponding to your specific application, in addition to the standard 10 N, you can also choose an actuating force of 5, 20 or 30 N.

  Actuating forces from 30 to 100 N can be realised with the aid of additional components that are mounted on the outside of the switch.

- **Anti-tamper facility:**

  The switching system is protected by multiple coding to ensure enhanced safety of your application.

- **Outstanding handling:**

  With the two slots you can easily adjust the SK safety switch and lock it in position by means of the two holes accessible from the top or the two holes accessible from the front. The switch can be wired from three different sides. A transparent cover prevents foreign particles from entering the contact space while connecting the power supply cable.

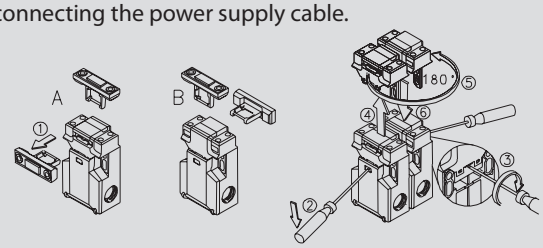

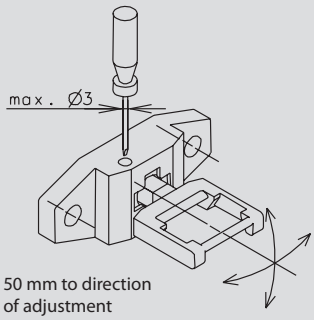

50 mm to direction
of adjustment
Actuator: metal

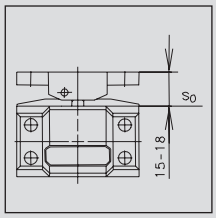

Technical data

Electrical data		
Rated insulation voltage (up to) ①	U_i max.	400 V AC
Rated operating voltage	U_e max.	240 V
Conventional thermal current (up to) ①	I_{the}	10 A
Utilization category		AC-15, U_e /I_e 240 V / 1.5 A
Mechanical data		
Switching frequency	≤ 30/min	
Mechanical service life	1 x 10^6 switching cycles	
B10d (bis zu) ①	2 Mill.	
Short-circuit protection (up to) ①	Fuse 10 A gL/gG	
Protection class	II, Insulated	
Ambient temperature	–30 °C ... + 80 °C	
Protection class	IP 65 conforming to IEC/EN 60529	
Type of connection	Screw connections	
Conductor cross sections	Single-wire 0.5 – 1.5 mm^2 or Stranded wire with ferrule 0.5 – 1.5 mm^2	
Enclosure	Thermoplastic, glass fibre-reinforced (UL94-V0)	
Cable entry	3 x M20 x 1.5	
Standards		
VDE 0660 T100, DIN EN 60947-1, IEC 60947-1 VDE 0660 T200, DIN EN 60947-5-1, IEC 60947-5-1		

① Depending on switching system. See Table on Pages 70 – 73.

SKC

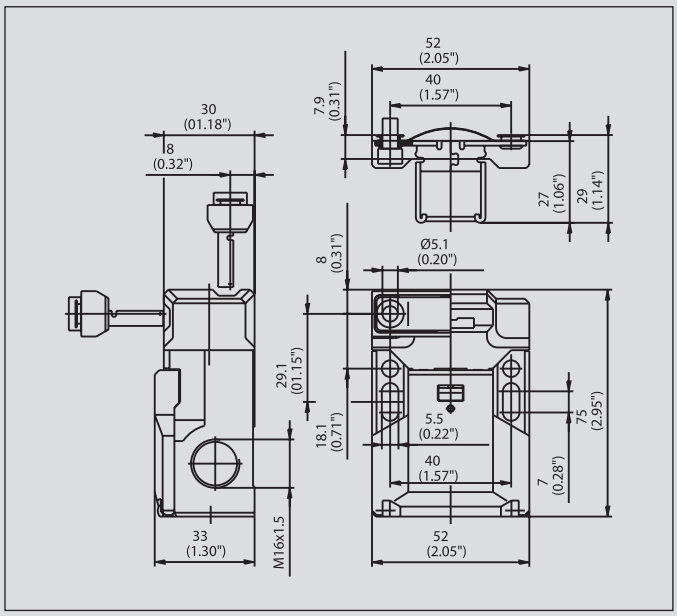

In terms of lengths, the SKC safety position switch is the 15 mm shorter variant of the SK. This makes it the right choice for confined installation conditions.

The SKC otherwise offers the same advantages as the SK: Industrial standard with particular emphasis on safety, personal protection and a variable actuator head with two actuator openings.

Other decisive advantages include:

- **Different actuating forces:**

  Corresponding to your specific application, in addition to the standard 10 N, you can also choose an actuating force of 5, 20, 30 or 50 N.

  Actuating forces from 30 to 100 N can be realised with the aid of additional components that are mounted on the outside of the switch.

- **Anti-tamper facility:**

  The switching system is protected by multiple coding to ensure enhanced safety of your application.

- **Outstanding handling:**

  With the two slots you can easily adjust the SKC safety switch and lock it in position by means of the two holes accessible from the top or the two holes accessible from the front. The switch can be wired from three different sides. A transparent cover prevents foreign particles from entering the contact space while connecting the power supply cable.

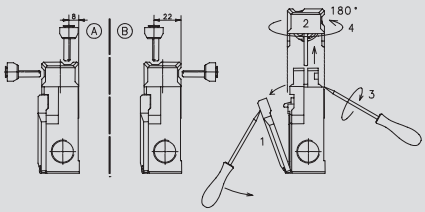

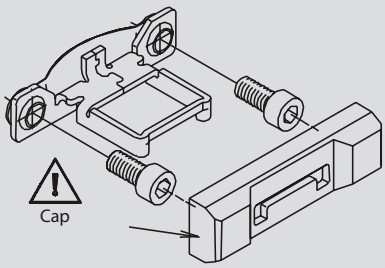

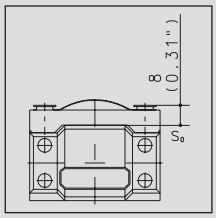

R_{min} 150 mm (5.9")
Actuator: Metal

Technical data

Electrical data		
Rated insulation voltage	U_i max.	250 V AC
Rated operating voltage	U_e max.	240 V
Conventional thermal current	I_{the}	5 A
Utilization category		AC-15, U_e /I_e 240 V / 1.5 A
Mechanical data		
Switching frequency	≤ 30/min.	
Mechanical service life	1 x 10^6 switching cycles	
B10d (up to) ①	2 Mill.	
Short-circuit protection	Fuse 6 A gL/gG	
Protection class	II, Insulated	
Ambient temperature	–30 °C ... + 80 °C	
Protection class	IP 65 conforming to IEC/EN 60529	
Type of connection	Screw connections	
Conductor cross sections	Single-wire 0.5 – 1.5 mm^2 or Stranded wire with ferrule 0.5 – 1.5 mm^2	
Enclosure	Thermoplastic, glass fibre-reinforced (UL94-V0)	
Cable entry	3 x M16 x 1.5	
Standards		
VDE 0660 T100, DIN EN 60947-1, IEC 60947-1 VDE 0660 T200, DIN EN 60947-5-1, IEC 60947-5-1		

① Depending on switching system. See Table on Pages 70 – 73.

Safety Switches with Separate Actuator

SKT

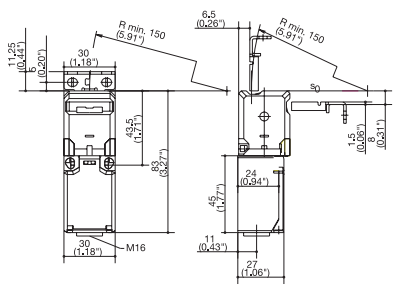

SKI

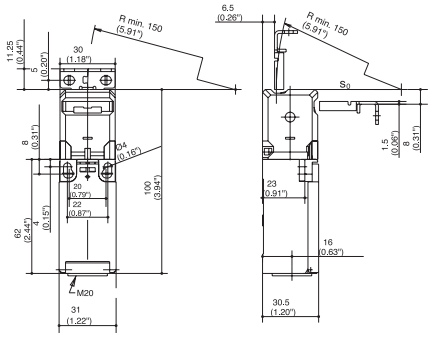

Switching operation	SKT Standard	SKT High actuating force	SKT Radius actuation	SKI Standard	SKI High actuating force	SKI Radius actuation
1 NC / 1 NO contact	**6016419059** SKT-U1Z M3			**6016819052** SKI-U1Z M3	**6016819139** SKI-U1Z FI50 M3	**6016819123** SKI-U1Z MRU
1 NC contacts						
2 NC contacts	**6016469066** SKT-A2Z M3			**6016869056** SKI-A2Z M3		**6016869122** SKI-A2Z MRU
1 NC / 1 NO contact Overlapping				**6016869058** SKI-UV15Z M3	**6016869145** SKI-UV15Z FI50 M3	**6016869131** SKI-UV15Z MRU
Approvals						

Special features / variants
(on request)

- Replacement actuator for:
  3112850340

Special features / variants
(on request)

- Replacement actuator for:

Standard	**3112850340**
High actuating force	**3112850340**
Radius actuation	**3911452058**

SKC

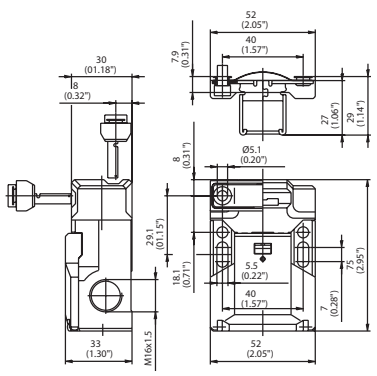

Standard	High actuating force	Radius actuation
6016169039 SKC-A1Z M	**6116169016** SKC-A1Z F30 M	**6016169087** SKC-A1Z MRU

SK

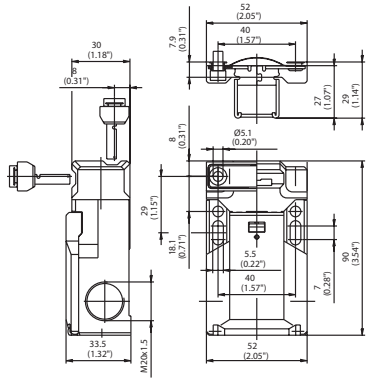

Standard	High actuating force	Radius actuation
6016119016 SK-U1Z M	**6116119109** SK-U1Z F30 M	**6016119084** SK-U1Z MRU
6016169036 SK-A2Z M	**6016169053** SK-A2Z F30 M	**6016169085** SK-A2Z MRU
6016169026 SK-UV15Z M	**6016169061** SK-UV15Z F30 M	**6016169086** SK-UV15Z MRU

Special features / variants
(on request)

- 50 N and 100 N actuating force on request
- Replacement actuator for:

Standard	**3911452116**
High actuating force	**3911451914**
Radius actuation	**3911452058**

Special features / variants
(on request)

- 100 N actuating force on request
- Replacement actuator for:

Standard	**3911452116**
High actuating force	**3911451914**
Radius actuation	**3911452058**

Switch with VTW, VTU, VT actuator

ENM-VTW

ENK-VTU

These position switches of the tried-and-tested switch families I88, ENK, ENM2 and GC correspond to Type 2.

This means that you can use Type 1 and Type 2 position switches corresponding to your applications while using one family of switches.

This results in many advantages:

- **Standardisation:**
  Switches of one family have the same mounting dimensions and the same electrical properties.
- **Reduced costs:**
  II88, ENK, ENM2 and GC are used in large quantities. This not only reflects the quality of the products but also means lower prices compared to special designs used in small quantities.

Variable VTU head

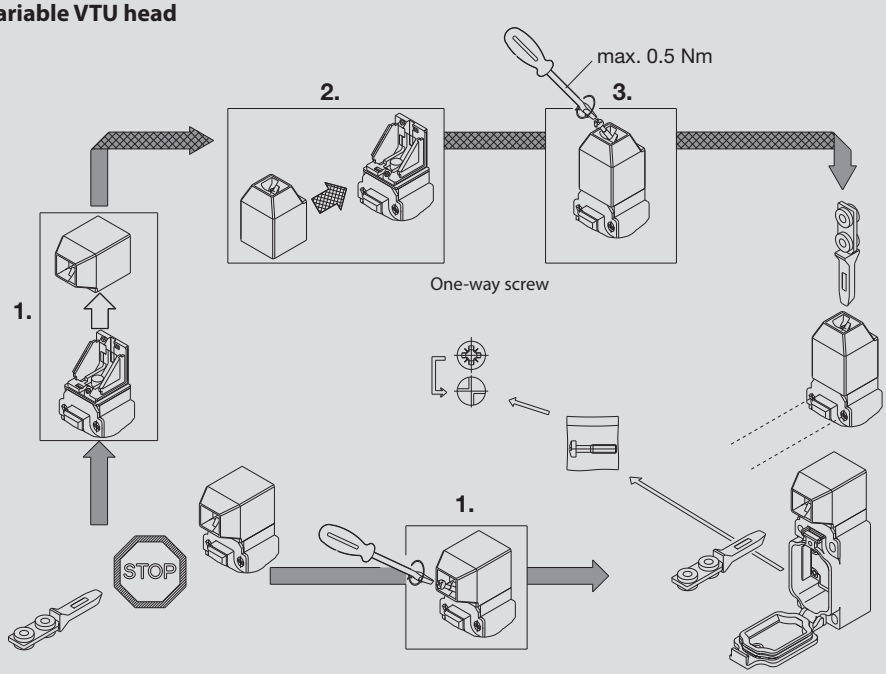

Repositioning the actuator head either in horizontal or vertical direction results in 8 approach actuator directions.

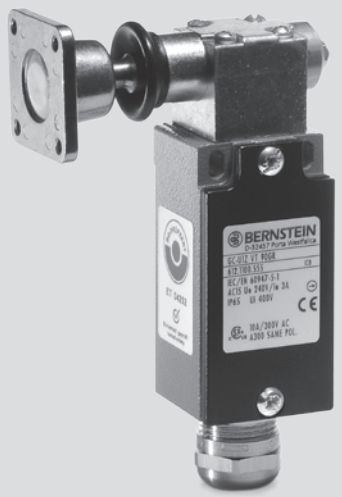

GC-VT

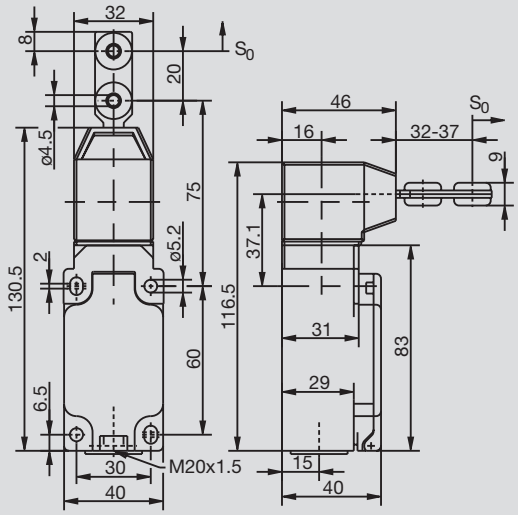

Technical data		I88	ENK	ENM2	GC
Electrical data					
Rated insulation voltage	U_i	250 V AC	400 V AC	400 V AC	400 V AC
Conventional thermal current (up to) ①	I_{the}	10 A	10 A	10 A	10 A
Rated operating voltage	U_e	240 V	240 V	240 V	240 V
Utilization category (up to) ①		AC-15, U_e /I_e 240 V / 3 A	AC-15, U_e /I_e 240 V / 3 A	AC-15, U_e/I_e 240 V / 3 A	AC-15, U_e /I_e 240 V / 3 A
Forced disconnection	⊖	conforming to IEC/EN 60947-5-1, Addendum K	conforming to IEC/EN 60947-5-1, Addendum K	conforming to IEC/EN 60947-5-1, Addendum K	conforming to IEC/EN 60947-5-1, Addendum K
Short-circuit protection (up to) ①		Fuse 10 A gL/gG	Fuse 10 A gL/gG	Fuse 10 A gL/gG	Fuse 10 A gL/gG
Protection class		II, Insulated	II, Insulated	I	I
Mechanical data					
Enclosure		Thermoplastic, glass fibre-reinforced (UL 94-V0)	Thermoplastic, glass fibre-reinforced	Aluminium pressure die-casting	Aluminium pressure die-casting
Cover		Thermoplastic, glass fibre-reinforced (UL 94-V0)	Thermoplastic, glass fibre-reinforced	Sheet aluminium	Sheet aluminium
Actuation		Separate actuator, Thermoplastic	Separate actuator, (St/PA), Actuator (PA6 GV/Zn-GD)	Separate actuator,(St / PA)	Separate actuator
Ambient temperature		–30°C to + 80°C	–30°C to + 80°C	–30°C to + 80°C	–30°C to + 80°C
Mechanical service life		1 x 10^6 switching cycles	1 x 10^6 switching cycles	1 x 10^6 switching cycles	1 x 10^6 switching cycles
B10d		2 mill.	2 mill.	2 mill.	2 mill.
Switching frequency		≤ 50/min.	max. 30/min.	≤ 50/min.	≤ 10/min.
Mounting		2 x M4	4 x M5	4 x M5	2 x M4
Type of connection		Screw connections	Screw connections	Screw connections	Screw connections
Conductor cross sections		Single-wire 0.5 – 1.5 mm^2 or Stranded wire with ferrule 0.5 – 1.5 mm^2	Single-wire 0.5 – 1.5 mm^2 or Stranded wire with ferrule 0.5 – 1.5 mm^2	Single-wire 0.5 – 1.5 mm^2 or Stranded wire with ferrule 0.5 – 1.5 mm^2	Single-wire 0.5 – 1.5 mm^2 or Stranded wire with ferrule 0.5 – 1.5 mm^2
Cable entry		1 x M20 x 1.5	1 x M20 x 1.5	1 x M20 x 1.5	1 x M20 x 1.5
Weight		≈ 0.09 kg	≈ 0.23 kg	≈ 0.33 kg	≈ 0.32 kg
Installation position		Any	Any	Any	Any
Protection class		IP 65 conforming to EN 60529	IP 65 conforming to EN 60529	IP 65 conforming to EN 60529	IP 65 conforming to EN 60529
Standards					
VDE 0660 T100, DIN EN 60947-1, IEC 60947-1 VDE 0660 T200, DIN EN 60947-5-1, IEC 60947-5-1					

① Depending on switching system. See Table on Pages 70 – 73.

	ENK VTU			ENM2 VTW		
	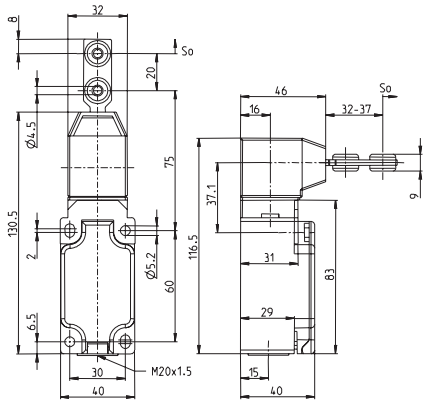			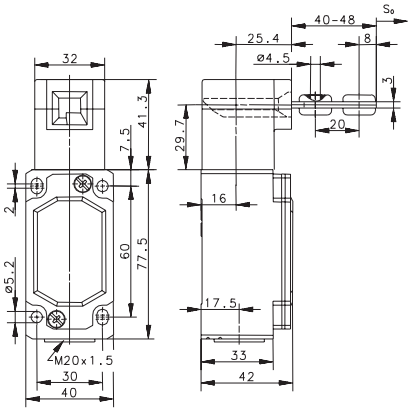		
Switching operation	**Standard**	**High actuating force**	**Radius actuation**	**Standard**	**High actuating force**	**Radius actuation**
1 NC / 1 NO contact	**6016619132** ENK-U1Z VTU			**6016219100** ENM2-U1Z VTW		
2 NC contacts	**6016669133** ENK-A2Z VTU			**6016269105** ENM2-A2Z VTW		
1 NC / 1 NO contact Overlapping	**6016669154** ENK-UV15Z VTU					
Approvals						

Replacement actuator: 3911702228

Special features / variants
(on request)

- All actuators specified under "Safety Switches with Separate Actuator and Latching Device (SLK/SLM)" can be used for these switches

Replacement actuator: 3911702228

Special features / variants
(on request)

- All actuators specified under "Safety Switches with Separate Actuator and Latching Device (SLK/SLM)" can be used for these switches

GC VT

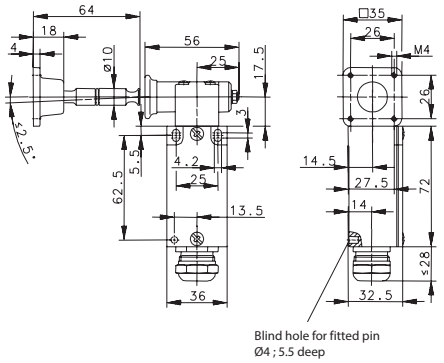

Standard **High actuating force**

6121100555
GC-U1Z VT 90GR

6116769064
GC-A2Z VT 90GR

Replacement actuator: 3912001275

Special features / variants
(on request)

SLK

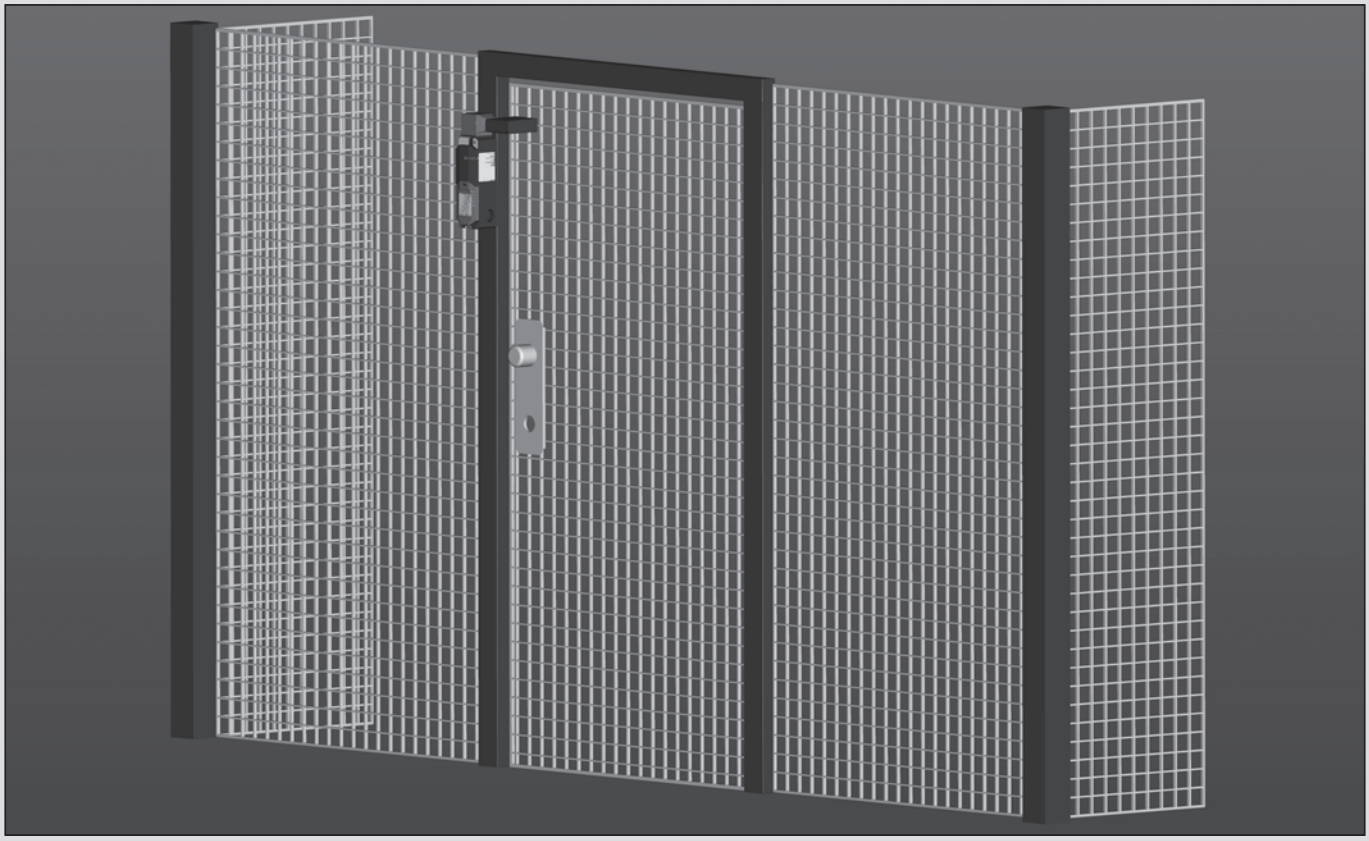

Machines that continue running after being switched off are often part of automated production processes. Safety guards prevent operator access and must therefore be kept closed until the hazards posed by machine movement have ceased.

Safety position switches with interlock function ensure that safety gates, safety doors and other protective guards remain closed for as long as a hazardous situation exists.

In production processes safety position switches have three main tasks:

- Enabling the machine / process when the safety guard is closed and interlocked
- Disabling the machine / process when the safety guard is opened
- Position monitoring of the safety guard and interlock

The SLK / SLM safety position switches with separate actuators and interlock enable the user to realise locking systems conforming to EN 1088, EN ISO 12100-1, 12100-2 and since 29.12.2009 to the compulsory Machinery Directive 2006/42/EC.

System description

SLK / SLM safety position switches with interlock function are available in versions with spring force locking action and magnetic force locking action. The separate actuator is connected formfit with the safety guard. It transfers the locking force to the safety guard and monitors its position. Thanks to its triple coding, the separate actuator ensures a high degree of antitamper security. The interlock facility in association with the SLK / SLM safety position switches is integrated in the switch enclosure. To lock the actuator in connection with a switching mechanism, the required interlock is achieved by means of a spring mechanism in the spring force locked version and by an electromagnet in the magnetic force locked version.

Locking principle

Spring force (closed-circuit current)

The safety guard is locked automatically when the actuator is inserted to its end position. It is unlocked by energising the electromagnet, allowing the safety guard to be opened.

Magnetic force (working current)

The lock (interlock) is deactivated when the electromagnet is de-energised in the event of a fault in actuation or power failure. This allows the safety guard to be opened.

Product advantages

- Two independent safety circuits ensure reliable integration
  - With two contacts, circuit 1 monitors the actuator
  - With two contacts, circuit 2 monitors the interlock

    The contact configuration is variable and may deviate from the selection table if required.
- Two different operating voltages for universal integration:
  - 24 V AC / DC
  - 110 V / 230 V AC
- Rotary actuating head (4x 90°) as well as horizontal and vertical actuation ensure complete flexibility in use
- Compact design with short overall size of only 170 mm
- Innovative installation with spring-loaded terminals
- Function conforming to GS ET 19, EN 60 204-1, EN 60 947-1 and EN 60 947-5-1

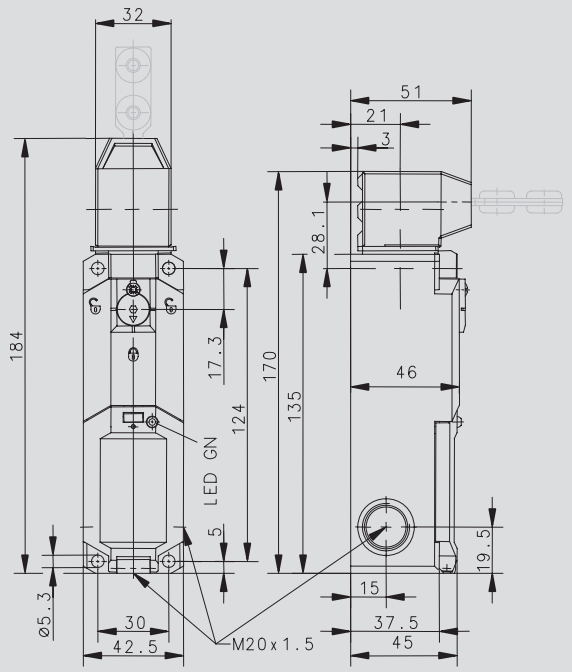

The actuator is not included and must be ordered separately.

Safe operation

The stainless steel actuator ensures safe and reliable operation. Its coding prevents tampering and bypassing the system "in an easier way". The radius actuator is ideal for monitoring smaller safety gates. It can be preset horizontally or vertically and is also made from stainless steel.

Flexible in use

The SLK safety switch can be actuated in a horizontal and vertical direction. Prior to installation it is preset by simply repositioning the head section. This flexibility in installation is achieved by positioning the actuator head in steps of 4 x 90°.

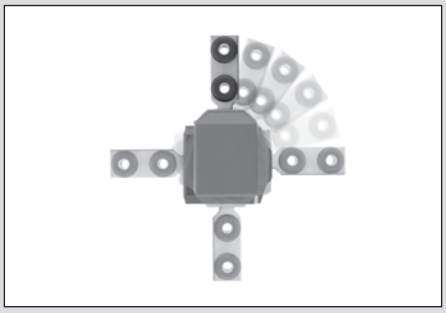

New symbol according to ISO 14119 for the interlocking contact:

Contacts labelled with this symbol in the switching travel diagram in the operating and installation instructions are safely positively driven contacts which monitor the interlocking position.
This only concerns interlocking switches equipped with a fail-locking system.
That means the interlocking function can only be activated if the actuator has been inserted in the switch.
As a result, it is only possible to monitor the safe door position and the interlocking function only with the contacts of the interlocking function.

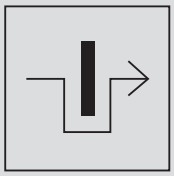

Innovative installation

The SLK is electrically connected safely and reliably by means of terminals.
Spring loaded terminals are used, into which the wires with ferrules can be inserted without the need for tools. The fact that the connection compartment is separate from the functional parts contributes to ensuring secure and reliable connection.
The connection compartment conforms to protection class IP 67.

IMPORTANT: The actuator for the SLK must be ordered separately. You will find a corresponding overview on Pages 90 – 91.

SLK

Product selection

Article number	Designation	Locking action	Supply voltage	Contacts Actuator	Interlock	Additional function
6018119045	SLK-F-UC-55-R1-A0-L0-0	Spring	24 Volt AC / DC	1NC / 1NO	1NC / 1NO	Auxiliary release
6018119066	SLK-F-UC-55-R1-A0-L1-0	Spring	24 Volt AC / DC	1NC / 1NO	1NC / 1NO	Auxiliary release, LED
6018169054	SLK-F-UC-22-R1-A0-L0-0	Spring	24 Volt AC / DC	2 NC	2 NC	Auxiliary release
6018169050	SLK-F-UC-25-R1-A0-L0-0	Spring	24 Volt AC / DC	2 NC	1NC / 1NO	Auxiliary release
6018169068	SLK-F-UC-25-R1-A0-L1-0	Spring	24 Volt AC / DC	2 NC	1NC / 1NO	Auxiliary release, LED
6018119061	SLK-F-UC-55-R2-A0-L0-0	Spring	24 Volt AC / DC	1NC / 1NO	1NC / 1NO	Emergency release
6018169055	SLK-F-NC-22-R1-A0-L0-0	Spring	110 / 230 AC	2 NC	2 NC	Auxiliary release
6018119046	SLK-F-NC-55-R1-A0-L0-0	Spring	110 / 230 AC	1NC / 1NO	1NC / 1NO	Auxiliary release
6018119067	SLK-F-NC-55-R1-A0-L1-0	Spring	110 / 230 AC	1NC / 1NO	1NC / 1NO	Auxiliary release, LED
6018169051	SLK-F-NC-25-R1-A0-L0-0	Spring	110 / 230 AC	2 NC	1NC / 1NO	Auxiliary release
6018169069	SLK-F-NC-25-R1-A0-L1-0	Spring	110 / 230 AC	2 NC	1NC / 1NO	Auxiliary release, LED
6018119047	SLK-M-UC-55-R0-A0-L0-0	Magnet	24 Volt AC / DC	1NC / 1NO	1NC / 1NO	
6018169052	SLK-M-UC-25-R0-A0-L0-0	Magnet	24 Volt AC / DC	2 NC	1NC / 1NO	
6018169056	SLK-M-UC-22-R0-A0-L0-0	Magnet	24 Volt AC / DC	2 NC	2 NC	
6018119048	SLK-M-NC-55-R0-A0-L0-0	Magnet	110 / 230 AC	1NC / 1NO	1NC / 1NO	
6018169053	SLK-M-NC-25-R0-A0-L0-0	Magnet	110 / 230 AC	2 NC	1NC / 1NO	
6018169057	SLK-M-NC-22-R0-A0-L0-0	Magnet	110 / 230 AC	2 NC	2 NC	

Technical data		Spring 24 Volt AC / DC	Spring 110 / 230 AC	Magnet 24 Volt AC / DC	Magnet 110 / 230 AC
Electrical data					
Rated insulation voltage	U_i	250 V	250 V	250 V	250 V
Utilization category		AC-15, U_e /I_e 230 V / 2.5 A	AC-15, U_e /I_e 230 V / 2.5 A	AC-15, U_e /I_e 230 V / 2.5 A	AC-15, U_e /I_e 230 V / 2.5 A
Conventional thermal current	I_{the}	5 A	5 A	5 A	5 A
Short-circuit protection		4 A gL	4 A gL	4 A gL	4 A gL
Protection class		II, Insulated	II, Insulated	II, Insulated	II, Insulated
Electromagnet					
Duty factor		100 % ED (an E1; E2)	100 % ED (an E1; E2)	100 % ED (an E1; E2)	100 % ED (an E1; E2)
Thermal class		F (155 °C)	F (155 °C)	F (155 °C)	F (155 °C)
Switch-on power		12 VA (0.2 s)	65 VA (0.1 s)	12 VA (0.2 s)	12 VA (0.2 s)
Continuous power		4.4 VA	8 VA	4.4 VA	4.4 VA
Mechanical data					
Enclosure		Thermoplastic GV (UL94-V0)	Thermoplastic GV (UL94-V0)	Thermoplastic GV (UL94-V0)	Thermoplastic GV (UL94-V0)
Cover		Thermoplastic GV (UL94-V0)	Thermoplastic GV (UL94-V0)	Thermoplastic GV (UL94-V0)	Thermoplastic GV (UL94-V0)
Actuator		Thermoplastic GV / Zn-GD	Thermoplastic GV / Zn-GD	Thermoplastic GV / Zn-GD	Thermoplastic GV / Zn-GD
Ambient temperature		–25 °C to + 70 °C	–25 °C to + 70 °C	–25 °C to + 70 °C	–25 °C to + 70 °C
Switching function		2 NC contacts, 2 NO contacts	2 NC contacts, 2 NO contacts	4 NC contacts	2 NC contacts, 2 NO contacts
Switching principle		4 Slow-action contacts	4 Slow-action contacts	4 Slow-action contacts	4 Slow-action contacts
Mechanical service life		1 x 10^6 switching cycles (max. 600 switching cycles / h)	1 x 10^6 switching cycles (max. 600 switching cycles / h)	1 x 10^6 switching cycles (max. 600 switching cycles / h)	1 x 10^6 switching cycles (max. 600 switching cycles / h)
B10d		2 mill.	2 mill.	2 mill.	2 mill.
Minimum actuating radius	R_{min}	See datasheet, actuator	See datasheet, actuator	See datasheet, actuator	See datasheet, actuator
Approach speed	V_{max}	0.5 $^m/_s$	0.5 $^m/_s$	0.5 $^m/_s$	0.5 $^m/_s$
Mounting		4 x M5	4 x M5	4 x M5	4 x M5
Cross sections		0.5 – 1.5 mm^2	0.5 – 1.5 mm^2	0.5 – 1.5 mm^2	0.5 – 1.5 mm^2
Type of connection		Cage clamp terminal	Cage clamp terminal	Cage clamp terminal	Cage clamp terminal
Cable entry		3 x M20 x 1.5	3 x M20 x 1.5	3 x M20 x 1.5	3 x M20 x 1.5
Weight		≈ 0.34 kg	≈ 0.30 kg	≈ 0.30 kg	≈ 0.35 kg
Protection class		IP67 conforming to IEC/EN 60529	IP67 conforming to IEC/EN 60529	IP67 conforming to IEC/EN 60529	IP67 conforming to IEC/EN 60529
Installation position		Any	Any	Any	Any
Locking principle		Spring force	Spring force	Magnetic force	Magnetic force
Latching force	FZh	≤ 1500 N to GS-ET-19	≤ 1500 N to GS-ET-19	≤ 1500 N to GS-ET-19	≤ 1500 N to GS-ET-19

Notes

SLM

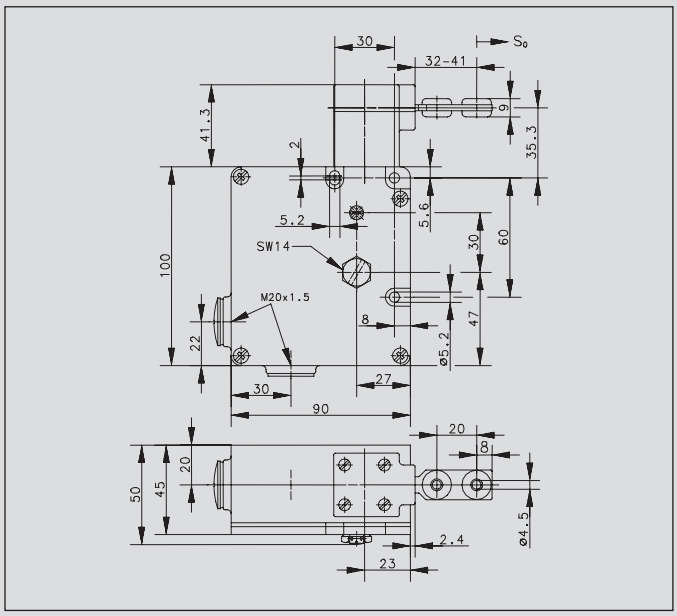

Product advantages

- Highly resistant in harsh industrial environments and with compact enclosure for space-saving installation
- Triple-coded actuator with high anti-tamper security
- Approach direction of actuator easily changed in 90° steps (repositioning only possible with actuator inserted)
- Entire function unit encapsulated on the inside
- Separate connection compartment for safe wiring at contact strip
- Two independent safety circuits ensure reliable integration
  - With two contacts, circuit 1 monitors the actuator
  - With two contacts, circuit 2 monitors the interlock
  - The contact configuration is variable and may deviate from the selection table if required
- Integrated protective circuit avoids polarity reversal and voltage peaks
- Function conforming to VDE 0660 Part 200, EN 60 947-5-1 and GS ET 19
- The SLM safety switches are supplied as standard with actuator A1

Options

- Individual contact configuration
- Radius actuator for actuating radii of less than 400 mm
- Auxiliary release
- Two independent safety circuits ensure reliable integration
- Solutions to customer specifications

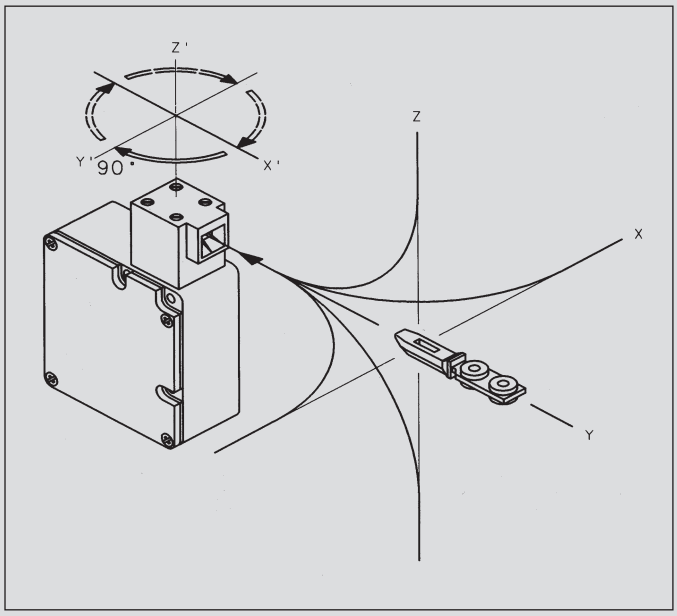

Product selection

Article number	Designation	Locking action	Contacts Actuator	Contacts Interlock	Supply voltage	Additional function
6017119020	SLM-FVTW 24DC-55-AR	Spring	1NC / 1NO	1NC / 1NO	24 Volt DC	Auxiliary release
6017169067	SLM-FVTW 24DC-22-AR	Spring	2 NC	2 NC	24 Volt DC	Auxiliary release
6017119047	SLM-FVTW 24DC-55-KR	Spring	1NC / 1NO	1NC / 1NO	24 Volt DC	With key release
6117169023	SLM-FVTW 24AC-22-AR	Spring	2 NC	2 NC	24 Volt AC	Auxiliary release
6017119032	SLM-FVTW 120AC-55-AR	Spring	1NC / 1NO	1NC / 1NO	120 Volt AC	Auxiliary release
6017119022	SLM-FVTW 230AC-55-AR	Spring	1NC / 1NO	1NC / 1NO	230 Volt AC	Auxiliary release
6017169066	SLM-MVTW 24DC-22	Magnet	2 NC	2 NC	24 Volt DC	
6017119023	SLM-MVTW 24DC-55	Magnet	1NC / 1NO	1NC / 1NO	24 Volt DC	
6017119024	SLM-MVTW 230AC-55	Magnet	1NC / 1NO	1NC / 1NO	230 Volt AC	

Technical data	Spring 24 Volt DC	Spring 120 Volt AC	Spring 230 Volt AC	Magnet 24 Volt DC	Magnet 230 Volt AC
Electrical data					
Rated insulation voltage U_i	250 V	250 V	250 V	250 V	250 V
Utilization category	AC-12, U_e /I_e 250 V / 10 A AC-15, U_e /I_e 230 V / 4 A	AC-12, U_e /I_e 250 V / 10 A AC-15, U_e /I_e 230 V / 4 A	AC-12, U_e /I_e 250 V / 10 A AC-15, U_e /I_e 230 V / 4 A	AC-12, U_e /I_e 250 V / 10 A AC-15, U_e /I_e 230 V / 4 A	AC-12, U_e /I_e 250 V / 10 A AC-15, U_e /I_e 230 V / 4 A
Conventional thermal current I_{the}	5 A	5 A	5 A	5 A	5 A
Short-circuit protection	10 A gL/gG	10 A gL/gG	10 A gL/gG	10 A gL/gG	10 A gL/gG
Protection class	I	I	I	I	I
Electromagnet					
Duty factor	100 % ED	100 % ED	100 % ED	100 % ED	100 % ED
Thermal class	B (130 °C)	B (130 °C)	B (130 °C)	B (130 °C)	B (130 °C)
Continuous power	5.2 W	5.2 W	5.2 W	5.2 W	5.2 W
Operating voltage	24 V DC	120 V AC	230 V AC	24 V DC	230 V AC
Mechanical data					
Enclosure	Al die-cast	Al die-cast	Al die-cast	Al die-cast	Al die-cast
Cover	Sheet aluminium	Sheet aluminium	Sheet aluminium	Sheet aluminium	Sheet aluminium
Actuator	ZN die-cast	Al die-cast	Al die-cast	Al die-cast	Al die-cast
Ambient temperature	–30 °C to + 60 °C	–30 °C to + 60 °C	–30 °C to + 60 °C	–30 °C to + 60 °C	–30 °C to + 60 °C
Switching principle	4 Slow-action contacts	4 Slow-action contacts	4 Slow-action contacts	4 Slow-action contacts	4 Slow-action contacts
Mechanical service life	1 x 10^6 switching cycles	1 x 10^6 switching cycles	1 x 10^6 switching cycles	1 x 10^6 switching cycles	1 x 10^6 switching cycles
B10d	2 mill.	2 mill.	2 mill.	2 mill.	2 mill.
Minimum actuating radius R_{min}	400 mm	400 mm	400 mm	400 mm	400 mm
Approach speed V_{max}	1.5 $^m/_s$	1.5 $^m/_s$	1.5 $^m/_s$	1.5 $^m/_s$	1.5 $^m/_s$
Mounting	3 x M5	3 x M5	3 x M5	3 x M5	3 x M5
Cross sections	0.5 – 1.5 mm^2	0.5 – 1.5 mm^2	0.5 – 1.5 mm^2	0.5 – 1.5 mm^2	0.5 – 1.5 mm^2
Type of connection	Screws	Screws	Screws	Screws	Screws
Cable entry	2 x M20 x 1.5	2 x M20 x 1.5	2 x M20 x 1.5	2 x M20 x 1.5	2 x M20 x 1.5
Weight	≈ 0.81 kg	≈ 0.81 kg	≈ 0.81 kg	≈ 0.81 kg	≈ 0.81 kg
Protection class	IP67 conforming to IEC/EN 60529	IP67 conforming to IEC 529	IP67 conforming to IEC 529	IP67 conforming to IEC 529	IP67 conforming to IEC 529
Installation position	Any	Any	Any	Any	Any
Locking principle	Spring force	Spring force	Spring force latching	Spring force latching	Spring force latching
Latching force	≤ 1000 N to GS-ET 19	≤ 1000 N to GS-ET 19	≤ 1000 N to GS-ET 19	≤ 1000 N to GS-ET 19	≤ 1000 N to GS-ET 19

Product selection SLK, SLM, ENK-VTU, ENM2-VTW

Article number	Designation
3911702228	Actuator A1

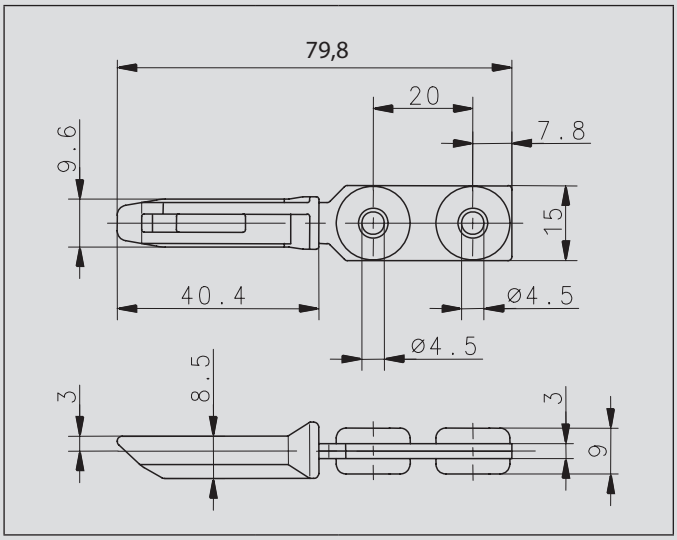

Mechanical data		
Actuator		Steel/PA
Minimum actuating radius	R_{min}	400 mm

Article number	Designation
3911702231	Actuator A4

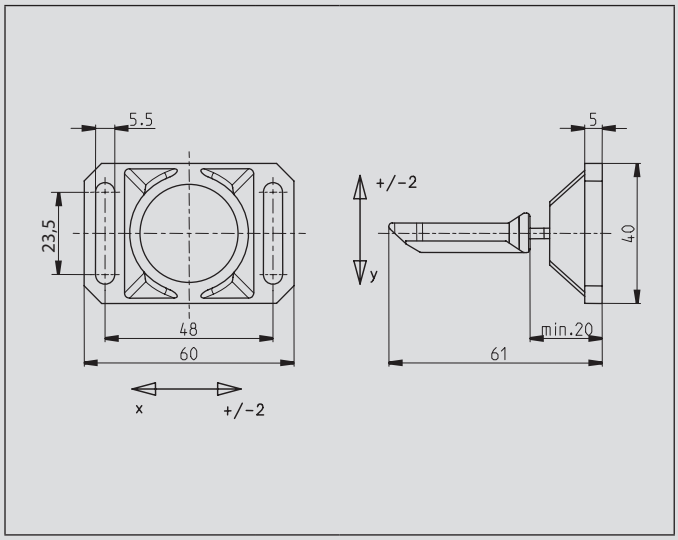

Mechanical data		
Actuator		Steel/PA
Enclosure		GD-Zn
Minimum actuating radius	R_{min}	350 mm
Repositioning of spring-mounted actuator by 4 x 90° in mounted state.		

Article number	Designation
3911702229	Actuator A2

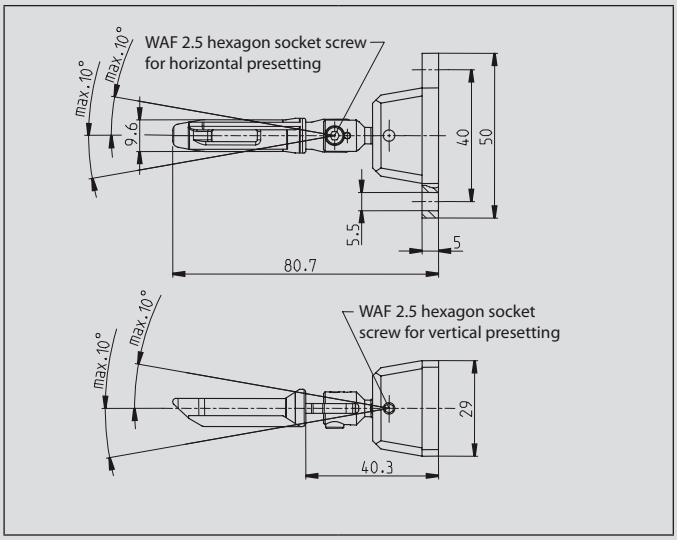

Mechanical data		
Enclosure / Actuator		Steel/PA
Minimum actuating radius	R_{min}	150 mm
Repositioning of spring-mounted actuator by 4 x 90° in not mounted state.		
WAF 2.5 Allen key, supplied		

Article number	Designation
3911702230	Actuator A3

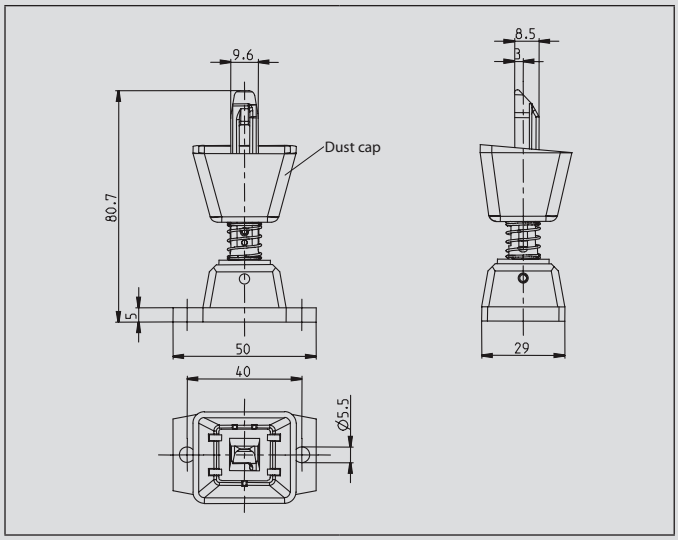

Mechanical data		
Enclosure / Actuator		Steel/PA
Dust cap		Elastomer CR
Minimum actuating radius	R_{min}	400 mm
Repositioning of spring-mounted actuator by 4 x 90° in not mounted state.		

Article number	Designation
3911702234	Actuator A7

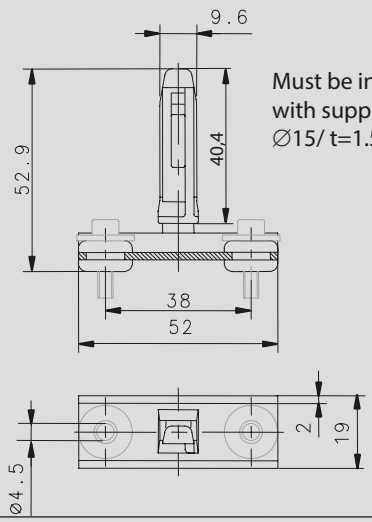

Must be installed
with supplied washers
∅15/ t=1.5 / ∅4.3!

Mechanical data		
Actuator		Steel/PA
U-section		Steel
Minimum actuating radius	R_{min}	400 mm