| | | | |
|---|---|---|---|
| BODINE ELECTRIC COMP | ANY | PART NO./REV: INFM0366 | A |
| | | DESCRIPTION: UNIT ASSY AC INVERTER HPP-5374E4 | |
| | | SHEET: Sheet1 | UNLESS OTHERWISE SPECIFIED: |
| | | SCALE: 1:2 | UNITS ARE IN INCHES [mm] |
| | | B | TOLERANCES:.XX:±.01 .XXX:±.005 |
| | | | ANGLES: X°:±3° X.X°:±0.5° |

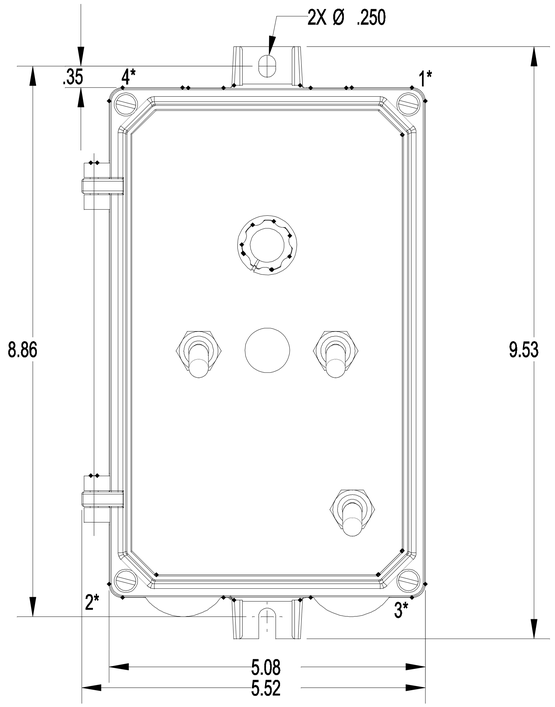


*TIGHTEN 4 COVER SCREWS IN ORDER INDICATED TO 12 LB*IN

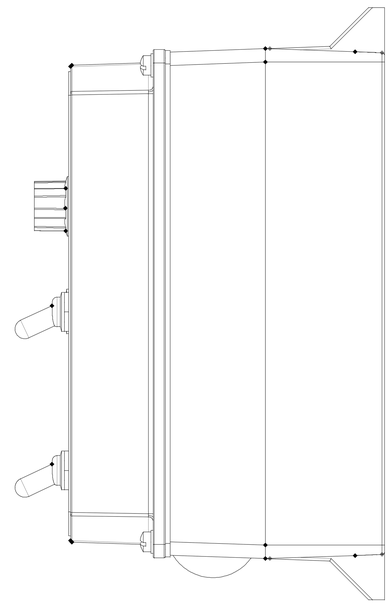

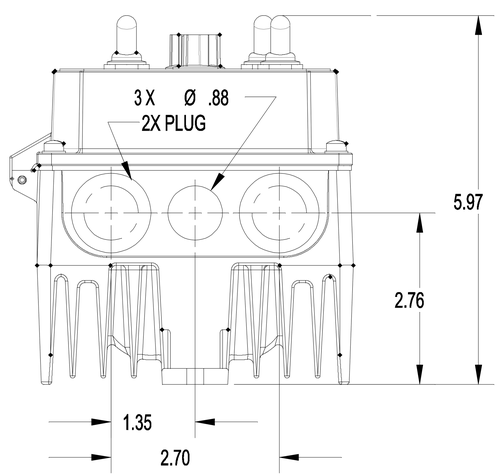


NOTES:
1. THE TOP COVER REQUIRES 5.4" CLEARANCE TO THE LEFT OF THE HINGE CENTERLINE WHEN IN THE OPEN POSITION

REPRESENTATIVE OF MODEL NUMBER(S):

2999