DRAWING NO.
SD208416

CATALOG NUMBER	FIG. NO.	COPPER CONDUCTOR RANGE	"B"	"J"	I-BEAM FLANGE THKNS	1 SUGGESTED TERMINALS COPPER CONDUCTOR	TERMINAL	"T" REF
YGIBS28-613-2N	1	2 - 4/0 AWG	3.00 [76]	1/2-13	.550" [14] TO .613" [16]	#2 STR. AWG	YGHA2C-2N	.26 [7]
						1/0 STR. AWG	YGHA25-2N	.19 [5]
YGIBW28-613-2N	3					2/0 STR. AWG	YGHA26-2N	.26 [7]
						4/0 STR. AWG	YGHA28-2N	.30 [8]
YGIBS34-613-2N	2	2 AWG-500 kcmil	6.00 [152]			250 kcmil	YGHA29-2N	.34 [9]
YGIBW34-613-2N	4					500 kcmil	YGHA34-2N	.40 [10]
YGIBS28-675-2N	1	2 - 4/0 AWG	3.00 [76]		.613" [16] TO .675" [17]	#2 STR. AWG	YGHA2C-2N	.26 [7]
						1/0 STR. AWG	YGHA25-2N	.19 [5]
YGIBW28-675-2N	3					2/0 STR. AWG	YGHA26-2N	.26 [7]
						4/0 STR. AWG	YGHA28-2N	.30 [8]
YGIBS34-675-2N	2	2 AWG-500 kcmil	6.00 [152]			250 kcmil	YGHA29-2N	.34 [9]
YGIBW34-675-2N	4					500 kcmil	YGHA34-2N	.40 [10]
YGIBW28-750-2N	3	4/0 AWG	3.00 [76]		.690 [18] .750 [19]	4/0 STR AWG	YGHA28-2N	.30 [8]
YGIBW28-1000-2N	3	#2 AWG - 4/0 AWG		1/2-13	1.000 [25] 1.060 [27]	#2 STR AWG 4/0 STR AWG	YGHA2C-2N YGHA28-2N	.26 [8] .30 [8]

REV.	DATE	DESCRIPTION	ECO	BY	C'K'D.
B	11/08/04	UPDATE TO NEW FORMAT & CHG. FLANGE THKNS FOR CAT.# YGIBW28-750-2N IN TABLE.	10141	DB	PL

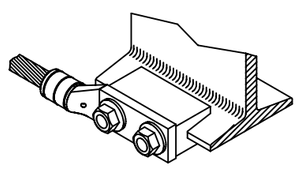

FIG. 1

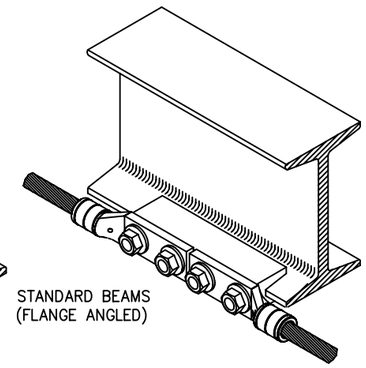

FIG. 2

STANDARD BEAMS

FIG. 3

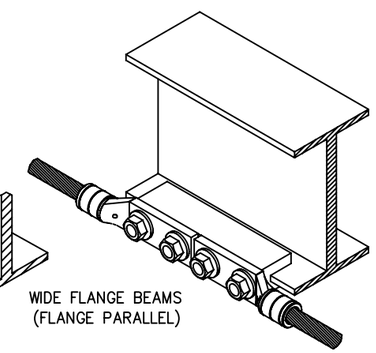

FIG. 4

WIDE FLANGE BEAMS

INSTALLED

NOTES:

1. TERMINAL CONNECTOR TO BE ORDERED SEPARATELY. WHEN I-BEAM CONNECTOR IS USED WITH TYPE "YGHA" TERMINAL THE CONNECTION MEETS IEEE 837-1989 REQUIREMENTS. TERMINAL TO BE ATTACHED TO YGIB CONNECTOR USING TMHG HARDWARE KIT. (SEE SHEET 1).

2. DIMENSIONS IN BRACKETS [ ] ARE IN MILLIMETERS, ROUNDED OFF TO THE NEAREST MILLIMETER, UNLESS OTHERWISE NOTED AND ARE FOR REFERENCE ONLY.

TO ORDER BURNDY® PRODUCTS CALL

UNITED STATES:
1-800-346-4175 (LONDONDERRY, NH)

CANADA:
1-800-361-6975 (QUEBEC)
1-800-387-6487 (ALL OTHER PROVINCES)

FOR PRODUCT INFO: http://www.burndy.com

TO ORDER BURNDY PRODUCTS CALL 1-800-346-4175
MANCHESTER, NH 03109, USA
FOR PRODUCT INFO = http://www.burndy.com

I-BEAM CONNECTOR FOR COPPER CABLE

ITEM NO: N/A

CAT NO: YGIB------2N

SCALE:	NTS	
DRAWN BY:	J.WALTERS	11/11/97
CHECKER:	--	--
DSN APPVL:	K.MELLO	9/18/97
MFG APPVL:	N/A	--
QC APPVL:	S.GRAY	10/20/97
MKT APPVL:	N/A	--
PROD FAM:	--	
PROJECT #:	--	
DOCUMENT TYPE:	Sales	
REL LEVEL:	AUtoCAD	

BURNDY

DRAWING NO	REV
SD208416	B
SIZE C	SHEET 4 OF 4