# Potentiometer
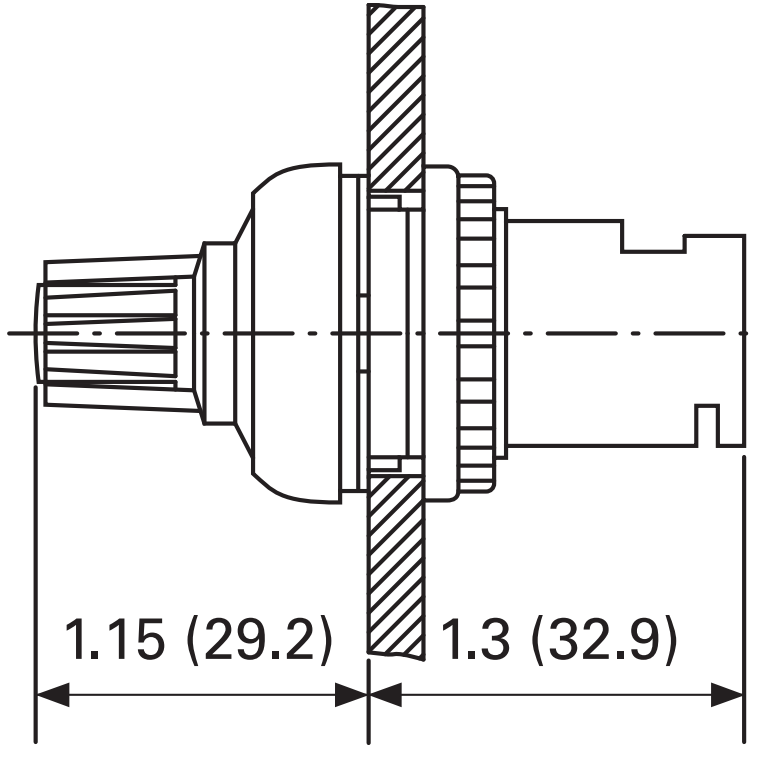
## M22(S)-R_