H, S series

ROTARY

General characteristics

	S	SP	H	HP	HA
Measurement	**Up to 625 pulses/turn:** By means of perforated metallic disk **From 625 pulses/turn on:** By means of graduated glass disk				
Accuracy	± 1/10 of the pitch				
Maximum speed	12 000 rpm				6 000 rpm
Vibration	100 m/seg^2 (10 ÷ 2000 Hz)				
Shock	300 m/seg^2 (11 m/seg)				
Inertia	16 gr/cm^2				30 gr/cm^2
Turning torque	0.003 Nm (30 gr/cm) max. at 20 °C				0.02 Nm (200 gr/cm)
Type of shaft	Solid shaft		Hollow shaft		Hollow shaft
Maximum load on the shaft	Axial: 10 N Radial: 20 N		–		Axial: 40 N Radial: 60 N
Weight	0.3 kg				0.5 kg
Ambient characteristics:					
Running temperature	0 °C…+70 °C				
Storage temperature	-30 °C…+80 °C				
Relative humidity	98% non-condensing				
Protection	IP 64 (DIN 40050). On S and SP models: Optional IP 66				IP 65
Light source	IRED (InfraRed Emitting Diode)				
Maximum frequency	200 KHz				300 KHz
Reference signal I_0	One reference signal per encoder turn				
Supply voltage	5 V ± 5% (TTL)	5 V ± 10% (1 Vpp)	5 V ± 5% (TTL)	5 V ± 10% (1 Vpp)	5 V ± 5% (TTL)
Consumption	70 mA typical, 100 mA max. (without load)				
Output signals	⊔⊓ TTL differential	∿ 1 Vpp	⊔⊓ TTL differential	∿ 1 Vpp	⊔⊓ TTL differential
Maximum cable length	50 m	150 m	50 m	150 m	50 m

Number of pulses/turn

S	SP	H	HP	HA
100	–	100	–	–
200	–	200	–	–
250	–	250	–	–
400	–	400	–	–
500	–	500	–	–
600	–	600	–	–
635	–	635	–	–
1 000	1 000	1 000	1 000	–
1 024	1 024	1 024	1 024	1 024
1 250	1 250	1 250	1 250	1 800
1 270	1 270	1 270	1 270	2 000
1 500	1 500	1 500	1 500	2 048
2 000	2 000	2 000	2 000	2 500
2 500	2 500	2 500	2 500	3 000
3 000	3 000	3 000	3 000	3 600
–	3 600	–	–	4 000
–	4 320	–	–	4 096
5 000	5 000	–	–	5 000
–	–	–	–	10 000

S, SP model

Dimensions in mm

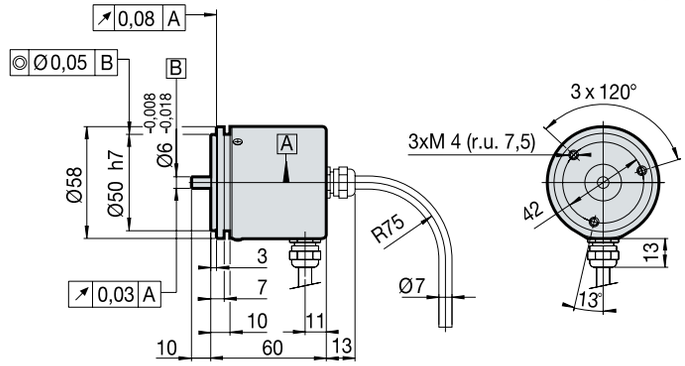

A Roller bearings

H, HP model

L: Min. 9 mm, max. 16 mm

ØD g7 mm
3
4
6
6.35
7
8
9.53
10

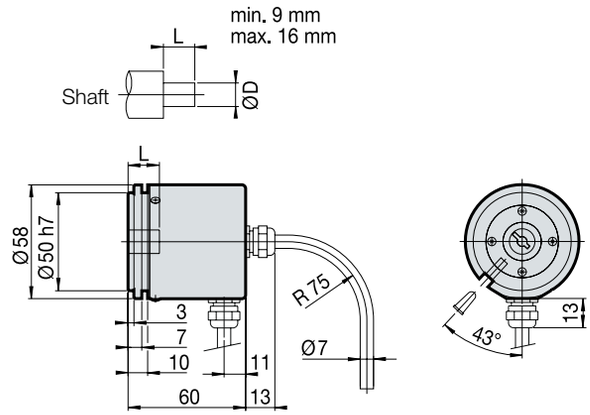

HA model

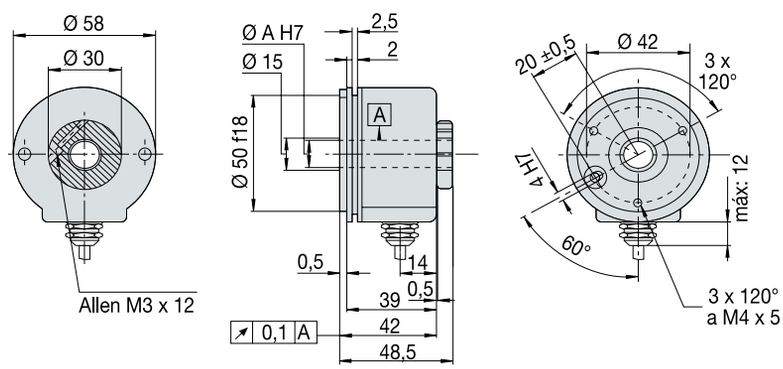

Order identification - models H, HP, S and SP

Example for a Rotary Encoder: **SP-1024-C5-R-12-IP 66**

S	P	1024	C5	R	12	IP 66
Model: • **S: Solid shaft** • H: Hollow shaft	Type of signal: • Blank space: square signal (TTL or HTL) • **P: 1 Vpp sinusoidal signal**	*Number of pulses/turn* (See table page 52)	Type of connector: • Blank space: 1 m cable without connector • C: Flange socket CONNEI 12 • **C5: 1 m cable with CONNEI 12 connector**	*Cable exit:* • **R: Radial** • Blank space: Axial	*Voltaje:* • Blank space: Standard 5 V supply • **12: Optional 12 V supply (only for HTL signal)**	*Protection*: • Blank space: Standard protection (IP 64) • **IP 66: Protection IP 66**

Order identification - HA model

Example for a Rotary Encoder: **HA - 22132 - 250**

HA	2	2	1	3	2	2500
Model: • **H: Hollow shaft**	*Type of clamp:* • 1: Rear clamp • **2: Front clamp**	Size of the hollow shaft (ØA): • **2: 12 mm**	*Output signals:* • **1: A, B, $\bar{I}_0$ plus their inverted**	*Type of connection:* • **3: Radial cable (1 m) with CONNEI 12 connector**	*Supply voltage:* • **2: RS-422 (5 V)**	*Number of pulses/turn* (See table page 52)