Instruction Manual

Compact Inverter

FRENIC-Mini

Three-phase 200 V series: FRN0001 to 0020C2S-2☐
Three-phase 400 V series: FRN0002 to 0011C2S-4☐
Single-phase 200 V series: FRN0001 to 0012C2S-7☐

⚠CAUTION

Thank you for purchasing our FRENIC-Mini series of inverters.

- This product is designed to drive a three-phase induction motor and three-phase permanent magnet synchronous motor. Read through this instruction manual and be familiar with the handling procedure for correct use.
- Improper handling might result in incorrect operation, a short life, or even a failure of this product as well as the motor.
- Deliver this manual to the end user of this product. Keep this manual in a safe place until this product is discarded.
- For instructions on how to use an optional device, refer to the instruction and installation manuals for that optional device.

Fuji Electric Co., Ltd. **INR-SI47-1729a-E**

Copyright © 2013 Fuji Electric Co., Ltd.

All rights reserved.

No part of this publication may be reproduced or copied without prior written permission from Fuji Electric Co., Ltd.

All products and company names mentioned in this manual are trademarks or registered trademarks of their respective holders.

The information contained herein is subject to change without prior notice for improvement.

Table of Contents

Preface iii
■ Safety precautions iv
Conformity to the Low Voltage Directive in the EU ... ix
■ Precautions for use xi
How this manual is organized xiv

Chapter 1 BEFORE USING THE INVERTER 1-1
1.1 Acceptance Inspection 1-1
1.2 External Views 1-2
1.3 Transportation 1-2
1.4 Storage Environment 1-3
1.4.1 Temporary storage 1-3
1.4.2 Long-term storage 1-3

Chapter 2 MOUNTING AND WIRING OF THE INVERTER 2-1
2.1 Operating Environment 2-1
2.2 Installing the Inverter 2-1
2.3 Wiring 2-2
2.3.1 Removing and mounting the terminal block covers 2-2
2.3.2 Terminal arrangement and screw specifications 2-3
2.3.3 Recommended wire sizes 2-4
2.3.4 Wiring precautions 2-6
2.3.5 Wiring for main circuit terminals and grounding terminals 2-7
2.3.6 Wiring for control circuit terminals ... 2-11
2.3.7 Setting up the jumper switches 2-18
2.3.8 Cautions relating to harmonic component, noise, and leakage current 2-20

Chapter 3 OPERATION USING THE KEYPAD . 3-1
3.1 Names and Functions of Keypad Components 3-1
3.2 Overview of Operation Modes 3-2
3.3 Running mode 3-4
3.3.1 Monitoring the running status 3-4
3.3.2 Setting up reference frequency and PID process command 3-5
3.3.3 Running/stopping the motor 3-7
3.4 Programming mode 3-8
3.4.1 Setting up the function codes – "Data Setting" 3-10
3.4.2 Checking changed function codes – "Data Checking" 3-13
3.4.3 Monitoring the running status – "Drive Monitoring" 3-15
3.4.4 Checking I/O signal status – "I/O Checking" 3-19
3.4.5 Reading maintenance information – "Maintenance Information" 3-23
3.4.6 Reading alarm information – "Alarm Information" 3-26
3.5 Alarm mode 3-29

Chapter 4 RUNNING THE MOTOR 4-1
4.1 Test Run 4-1
4.1.1 Checking prior to powering on 4-1
4.1.2 Powering ON and checking 4-1
4.1.3 Preparation before a test run --Configuring function code data 4-2
4.1.4 Test run 4-5
4.2 Operation 4-5
4.2.1 Jogging Operation 4-6

Chapter 5 FUNCTION CODES 5-1
5.1 Function Code Tables 5-1
5.2 Details of Function Codes 5-21
5.3 Notes in Driving PMSM 5-78

Chapter 6 TROUBLESHOOTING 6-1
6.1 Before Proceeding with Troubleshooting ... 6-1
6.2 If No Alarm Code Appears on the LED Monitor 6-2
6.2.1 Abnormal motor operation 6-2
6.2.2 Problems with inverter settings 6-8
6.3 If an Alarm Code Appears on the LED Monitor 6-10
6.4 If an Abnormal Pattern Appears on the LED Monitor while No Alarm Code is Displayed 6-24

Chapter 7 MAINTENANCE AND INSPECTION . 7-1
7.1 Daily Inspection 7-1
7.2 Periodic Inspection 7-1
7.3 List of Periodical Replacement Parts 7-3
7.3.1 Judgment on service life 7-4
7.4 Measurement of Electrical Amounts in Main Circuit 7-6
7.5 Insulation Test 7-8
7.6 Inquiries about Product and Guarantee 7-9
7.6.1 When making an inquiry 7-9
7.6.2 Product warranty 7-9

Chapter 8 SPECIFICATIONS 8-1
8.1 Standard Models 8-1
8.1.1 Three-phase 200 V class series 8-1
8.1.2 Three-phase 400 V class series 8-2
8.1.3 Single-phase 200 V class series 8-3
8.2 Common Specifications 8-4
8.3 Terminal Specifications 8-7
8.3.1 Terminal functions 8-7
8.3.2 Connection diagram in operation by external signal inputs 8-7
8.4 External Dimensions 8-9
8.4.1 Standard models 8-9
8.5 Protective Functions 8-11

Chapter 9 LIST OF PERIPHERAL EQUIPMENT AND OPTIONS 9-1

Chapter 10 APPLICATION OF DC REACTORS (DCRs) 10-1

Chapter 11 COMPLIANCE WITH STANDARDS ..11-1
11.1 Compliance with European Standards 11-1
11.2 Compliance with EMC Standards.....11-2
11.2.1 General.....11-2
11.2.2 Recommended installation procedure.....11-2
11.2.3 Leakage current of EMC-complaint filter (optional).....11-4
11.3 Harmonic Component Regulation in the EU 11-5
11.3.1 General comments.....11-5
11.3.2 Compliance with the harmonic component regulation 11-6
11.4 Compliance with the Low Voltage Directive in the EU.....11-6
11.4.1 General.....11-6
11.4.2 Points for consideration when using the FRENIC-Mini series in a system to be certified by the Low Voltage Directive in the EU 11-6

Preface

Thank you for purchasing our FRENIC-Mini series of inverters.

This product is designed to drive a three-phase induction motor and three-phase permanent magnet synchronous motor (PMSM). Read through this instruction manual and be familiar with proper handling and operation of this product.

Improper handling might result in incorrect operation, a short life, or even a failure of this product as well as the motor.

Have this manual delivered to the end user of this product. Keep this manual in a safe place until this product is discarded.

Listed below are the other materials related to the use of the FRENIC-Mini. Read them in conjunction with this manual as necessary.

- FRENIC-Mini User's Manual (24A7-E-0023)
- RS-485 Communication User's Manual (MEH448)
- Catalog (24A1-E-0011)

The materials are subject to change without notice. Be sure to obtain the latest editions for use.

Japanese Guideline for Suppressing Harmonics in Home Electric and General-purpose Appliances

Fuji three-phase 200 V class series of inverters with a capacity of 3.7 (4.0) kW or less, single-phase 200 V class series with 2.2 kW or less, and single-phase 100 V class series with 0.75 kW or less were once subject to the "Japanese Guideline for Suppressing Harmonics in Home Electric and General-purpose Appliances" (established in September 1994 and revised in October 1999), published by the Ministry of International Trade and Industry (currently the Ministry of Economy, Trade and Industry (METI)).

Since the revision of the guideline in January 2004, however, these inverters have no longer been subject to the guideline. The individual inverter manufacturers have voluntarily employed harmonics suppression measures.

As our measure, it is recommended that DC reactors (DCRs) authorized in this manual be connected to the FRENIC-Mini series of inverters.

When using DCRs not authorized in this manual, however, consult your Fuji Electric representative for the detailed specifications.

Japanese Guideline for Suppressing Harmonics by Customers Receiving High Voltage or Special High Voltage

Refer to the FRENIC-Mini User's Manual (24A7-E-0023), Appendix C for details on this guideline.

■ Safety precautions

Read this manual thoroughly before proceeding with installation, connections (wiring), operation, or maintenance and inspection. Ensure you have sound knowledge of the device and familiarize yourself with all safety information and precautions before proceeding to operate the inverter.

Safety precautions are classified into the following two categories in this manual.

⚠WARNING	Failure to heed the information indicated by this symbol may lead to dangerous conditions, possibly resulting in death or serious bodily injuries.
⚠CAUTION	Failure to heed the information indicated by this symbol may lead to dangerous conditions, possibly resulting in minor or light bodily injuries and/or substantial property damage.

Failure to heed the information contained under the CAUTION title can also result in serious consequences. These safety precautions are of utmost importance and must be observed at all times.

Application

⚠WARNING

- FRENIC-Mini is designed to drive a three-phase induction motor and three-phase permanent magnet synchronous motor (PMSM). Do not use it for single-phase motors or for other purposes.

  Fire or an accident could occur.

- FRENIC-Mini may not be used for a life-support system or other purposes directly related to the human safety.
- Though FRENIC-Mini is manufactured under strict quality control, install safety devices for applications where serious accidents or material losses are foreseen in relation to the failure of it.

  An accident could occur.

Installation

⚠WARNING

- Install the inverter on a nonflammable material such as metal.

  Otherwise fire could occur.

- Do not place flammable matter nearby.

  Doing so could cause fire.

⚠CAUTION

- Do not support the inverter by its terminal block cover during transportation.

  Doing so could cause a drop of the inverter and injuries.

- Prevent lint, paper fibers, sawdust, dust, metallic chips, or other foreign materials from getting into the inverter or from accumulating on the heat sink.

  Otherwise, a fire or an accident might result.

- Do not install or operate an inverter that is damaged or lacking parts.

  Doing so could cause fire, an accident or injuries.

- Do not get on a shipping box.
- Do not stack shipping boxes higher than the indicated information printed on those boxes.

  Doing so could cause injuries.

Wiring

⚠WARNING

- When wiring the inverter to the power source, insert a recommended molded case circuit breaker (MCCB) or residual-current-operated protective device (RCD)/earth leakage circuit breaker (ELCB) (with overcurrent protection) in the path of power lines. Use the devices within the recommended current range.
- Use wires in the specified size.
- When wiring the inverter to the power supply of 500 kVA or more, be sure to connect an optional DC reactor (DCR).

  Otherwise, fire could occur.

- Do not use one multicore cable in order to connect several inverters with motors.
- Do not connect a surge killer to the inverter's output (secondary) circuit.

  Doing so could cause fire.

- Be sure to connect the grounding wires without fail.

  Otherwise, electric shock or fire could occur.

- Qualified electricians should carry out wiring.
- Be sure to perform wiring after turning the power off.
- Ground the inverter in compliance with the national or local electric code.

  Otherwise, electric shock could occur.

- Be sure to perform wiring after installing the inverter body.

  Otherwise, electric shock or injuries could occur.

- Ensure that the number of input phases and the rated voltage of the product match the number of phases and the voltage of the AC power supply to which the product is to be connected.

  Otherwise fire or an accident could occur.

- Do not connect the power source wires to output terminals (U, V, and W).
- Do not insert a braking resistor between terminals P (+) and N (-), P1 and N (-), P (+) and P1, DB and N (-), or P1 and DB.

  Doing so could cause fire or an accident.

⚠WARNING⚠

- Generally, control signal wires are not reinforced insulation. If they accidentally touch any of live parts in the main circuit, their insulation coat may break for any reasons. In such a case, an extremely high voltage may be applied to the signal lines. Make a complete remedy to protect the signal line from contacting any hot high voltage lines.

  Doing so could cause an accident or electric shock.

⚠CAUTION

- Wire the three-phase motor to terminals U, V, and W of the inverter, aligning phases each other.

  Otherwise injuries could occur.

- The inverter, motor and wiring generate electric noise. Take care of malfunction of the nearby sensors and devices. To prevent the motor from malfunctioning, implement noise control measures.

  Otherwise an accident could occur.

Operation

⚠WARNING⚠

- Be sure to install the terminal block cover before turning the power on. Do not remove the cover while power is applied.

  Otherwise electric shock could occur.

- Do not operate switches with wet hands.

  Doing so could cause electric shock.

- If the retry function has been selected, the inverter may automatically restart and drive the motor depending on the cause of tripping.
  (Design the machinery or equipment so that human safety is ensured after restarting.)
- If the stall prevention function (current limiter), automatic deceleration, and overload prevention control have been selected, the inverter may operate at an acceleration/deceleration time or frequency different from the set ones. Design the machine so that safety is ensured even in such cases.

  Otherwise an accident could occur.

- The STOP key is only effective when function setting (Function code F02) has been established to enable the STOP key. Prepare an emergency stop switch separately. If you disable the STOP key priority function and enable operation by external commands, you cannot emergency-stop the inverter using the STOP key on the built-in keypad.
- If an alarm reset is made with the operation signal turned on, a sudden start will occur. Ensure that the operation signal is turned off in advance.

  Otherwise an accident could occur.

⚠WARNING⚠

- If you enable the "restart mode after momentary power failure" (Function code F14 = 4 or 5), then the inverter automatically restarts running the motor when the power is recovered.

  (Design the machinery or equipment so that human safety is ensured after restarting.)
- If you set the function codes wrongly or without completely understanding this instruction manual and the FRENIC-Mini User's Manual, the motor may rotate with a torque or at a speed not permitted for the machine.

  An accident or injuries could occur.
- Do not touch the inverter terminals while the power is applied to the inverter even if the inverter stops.

  Doing so could cause electric shock.

⚠CAUTION

- Do not turn the main circuit power on or off in order to start or stop inverter operation.

  Doing so could cause failure.
- Do not touch the heat sink or braking resistor because they become very hot.

  Doing so could cause burns.
- Setting the inverter to high speeds is easy. Before changing the frequency (speed) setting, check the specifications of the motor and machinery.
- The brake function of the inverter does not provide mechanical holding means.

  Injuries could occur.

Maintenance and inspection, and parts replacement

⚠WARNING⚠

- Turn the power off and wait for at least five minutes before starting inspection. Further, check that the LED monitor is unlit, and check the DC link bus voltage between the P (+) and N (-) terminals to be lower than 25 VDC.

  Otherwise, electric shock could occur.
- Maintenance, inspection, and parts replacement should be made only by qualified persons.
- Take off the watch, rings and other metallic matter before starting work.
- Use insulated tools.

  Otherwise, electric shock or injuries could occur.

Disposal

⚠CAUTION

- Handle the inverter as an industrial waste when disposing of it.
  Otherwise injuries could occur.

Others

⚠WARNING

- Never attempt to modify the inverter.
  Doing so could cause electric shock or injuries.

GENERAL PRECAUTIONS

Drawings in this manual may be illustrated without covers or safety shields for explanation of detail parts. Restore the covers and shields in the original state and observe the description in the manual before starting operation.

Conformity to the Low Voltage Directive in the EU

If installed according to the guidelines given below, inverters marked with CE are considered as compliant with the Low Voltage Directive 2006/95/EC.

⚠CAUTION

1. The ground terminal ⏚G should always be connected to the ground. Do not use only a residual-current-operated protective device (RCD)/earth leakage circuit breaker (ELCB)* as the sole method of electric shock protection. Be sure to use ground wires whose size is greater than power supply lines.

   * With overcurrent protection.

2. When used with the inverter, a molded case circuit breaker (MCCB), residual-current-operated protective device (RCD)/earth leakage circuit breaker (ELCB) or magnetic contactor (MC) should conform to the EN or IEC standards.
3. When you use a residual-current-operated protective device (RCD)/earth leakage circuit breaker (ELCB) for protection from electric shock in direct or indirect contact power lines or nodes, be sure to install **type B of RCD/ELCB** on the input (primary) of the inverter if the power source is three-phase 200/400 V. For single-phase 200 V power supplies, use **type A**.

   When you use no RCD/ELCB, take any other protective measure that isolates the electric equipment from other equipment on the same power supply line using double or reinforced insulation or that isolates the power supply lines connected to the electric equipment using an isolation transformer.
4. The inverter should be used in an environment that does not exceed Pollution Degree 2 requirements. If the environment conforms to Pollution Degree 3 or 4, install the inverter in an enclosure of IP54 or higher.
5. Install the inverter, AC or DC reactor, input or output filter in an enclosure with minimum degree of protection of IP2X (Top surface of enclosure shall be minimum IP4X when it can be easily accessed), to prevent human body from touching directly to live parts of these equipment.
6. To make an inverter with no integrated EMC filter conform to the EMC directive, it is necessary to connect an external EMC filter to the inverter and install them properly so that the entire equipment including the inverter conforms to the EMC directive.
7. Do not connect any copper wire directly to grounding terminals. Use crimp terminals with tin or equivalent plating to connect them.
8. To connect the three-phase or single-phase 200 V class series of inverters to the power supply in Overvoltage Category III or to connect the three-phase 400 V class series of inverters to the power supply in Overvoltage Category II or III, a supplementary insulation is required for the control circuitry.
9. When using inverters at an altitude of more than 2000 m, note that the basic insulation applies to the insulation degree of the control circuitry. At an altitude of more than 3000 m, inverters cannot be used.
10. The power supply mains neutral has to be earthed for the three-phase 400 V class inverter.
11. The inverter has been tested with IEC61800-5-1 2007 5.2.3.6.3 Short-circuit Current Test under the following conditions.

    Short-circuit current in the supply: 10 kA

    Maximum 240 V
    Maximum 480 V

Conformity to the Low Voltage Directive in the EU (Continued)

⚠CAUTION

12. Use wires listed in IEC60364-5-52.

Power supply voltage	Applicable motor rating (kW)	Inverter type	*1 Rated current (A) of MCCB or RCD/ELCB		Recommended wire size (mm^2)				
					*2 Main circuit power input [L1/R, L2/S, L3/T] [L1/L, L2/N] Grounding [⏚G]		*2 Inverter output [U, V, W]	*2 DCR [P1, P (+)] Braking resistor [P (+), DB]	Control circuit (30A, 30B, 30C)
			w/ DCR	*3 w/o DCR	w/ DCR	*3 w/o DCR			
Three-phase 200 V	0.1	FRN0001C2S-2☐	6	6	2.5	2.5	2.5	2.5	0.5
	0.2	FRN0002C2S-2☐							
	0.4	FRN0004C2S-2☐							
	0.75	FRN0006C2S-2☐		10					
	1.5	FRN0010C2S-2☐	10	16					
	2.2	FRN0012C2S-2☐		20					
	3.7	FRN0020C2S-2☐	20	35		4	4		
Three-phase 400 V	0.4	FRN0002C2S-4☐	6	6	2.5	2.5	2.5	2.5	0.5
	0.75	FRN0004C2S-4☐							
	1.5	FRN0005C2S-4☐		10					
	2.2	FRN0007C2S-4☐	10	16					
	3.7 (4.0)*	FRN0011C2S-4☐		20					
Single-phase 200 V	0.1	FRN0001C2S-7☐	6	6	2.5	2.5	2.5	2.5	0.5
	0.2	FRN0002C2S-7☐							
	0.4	FRN0004C2S-7☐		10					
	0.75	FRN0006C2S-7☐	10	16					
	1.5	FRN0010C2S-7☐	16	20		4			
	2.2	FRN0012C2S-7☐	20	35	4	6		4	

MCCB: Molded case circuit breaker
RCD: Residual-current-operated protective device
ELCB: Earth leakage circuit breaker

Note: A box (☐) in the above table replaces A, C, E, or U depending on the shipping destination. For three-phase 200 V class series of inverters, it replaces A or U.

* 4.0 kW for the EU. The inverter type is FRN0011C2S-4E.

*1 The frame size and model of the MCCB or RCD/ELCB (with overcurrent protection) will vary, depending on the power transformer capacity. Refer to the related technical documentation for details.

*2 The recommended wire size for main circuits is for the 70°C 600V PVC wires used at an ambient temperature of 40°C.

*3 In the case of no DC reactor, the wire sizes are determined on the basis of the effective input current calculated under the condition that the power supply capacity and impedance are 500 kVA and 5%, respectively.

■ Precautions for use

In running general-purpose motors	Driving a 400 V general-purpose motor	When driving a 400 V general-purpose motor with an inverter using extremely long wires, damage to the insulation of the motor may occur. Use an output circuit filter (OFL) if necessary after checking with the motor manufacturer. Fuji motors do not require the use of output circuit filters because of their good insulation.
	Torque characteristics and temperature rise	When the inverter is used to run a general-purpose motor, the temperature of the motor becomes higher than when it is operated using a commercial power supply. In the low-speed range, the cooling effect will be weakened, so decrease the output torque of the motor. If constant torque is required in the low-speed range, use a Fuji inverter motor or a motor equipped with an externally powered ventilating fan.
	Vibration	When an inverter-driven motor is mounted to a machine, resonance may be caused by the natural frequencies of the machine system. Note that operation of a 2-pole motor at 60 Hz or higher may cause abnormal vibration. * The use of a rubber coupling or vibration dampening rubber is recommended. * Use the inverter's jump frequency control feature to skip the resonance frequency zone(s).
	Noise	When an inverter is used with a general-purpose motor, the motor noise level is higher than that with a commercial power supply. To reduce noise, raise carrier frequency of the inverter. Operation at 60 Hz or higher can also result in higher noise level.
In running special motors	High-speed motors	If the reference frequency is set to 120 Hz or more to drive a high-speed motor, test-run the combination of the inverter and motor beforehand to check for safe operation.
	Explosion-proof motors	When driving an explosion-proof motor with an inverter, use a combination of a motor and an inverter that has been approved in advance.
	Submersible motors and pumps	These motors have a larger rated current than general-purpose motors. Select an inverter whose rated output current is greater than that of the motor. These motors differ from general-purpose motors in thermal characteristics. Set a low value in the thermal time constant of the motor when setting the electronic thermal function.
	Brake motors	For motors equipped with parallel-connected brakes, their braking power must be supplied from the input (primary) circuit. If the brake power is connected to the inverter's output (secondary) circuit by mistake, the brake will not work. Do not use inverters for driving motors equipped with series-connected brakes.

In running special motors	Geared motors	If the power transmission mechanism uses an oil-lubricated gearbox or speed changer/reducer, then continuous motor operation at low speed may cause poor lubrication. Avoid such operation.
	Synchronous motors	It is necessary to take special measures suitable for this motor type. For details about the PMSM drive, refer to Chapter 5, Section 5.3 "Notes in Driving PMSM."
	Single-phase motors	Single-phase motors are not suitable for inverter-driven variable speed operation. Use three-phase motors. * Even if a single-phase power supply is available, use a three-phase motor as the inverter provides three-phase output.
Environmental conditions	Installation location	The heat sink and braking resistor of the inverter may become hot under certain operating conditions, so install the inverter on nonflammable material such as metal. Ensure that the installation location meets the environmental conditions specified in Chapter 2, Section 2.1 "Operating Environment."
Combination with peripheral devices	Installing an MCCB or RCD/ELCB	Install a recommended molded case circuit breaker (MCCB) or residual-current-operated protective device (RCD)/earth leakage circuit breaker (ELCB) (with overcurrent protection) in the input (primary) circuit of the inverter to protect the wiring. Do not use the circuit breaker capacity exceeding the recommended rated current.
	Installing an MC in the secondary circuit	If a magnetic contactor (MC) is mounted in the inverter's secondary circuit for switching the motor to commercial power or for any other purpose, ensure that both the inverter and the motor are completely stopped before you turn the MC on or off. Do not connect a magnet contactor united with a surge killer to the inverter's secondary circuit.
	Installing an MC in the primary circuit	Do not turn the magnetic contactor (MC) in the input (primary) circuit on or off more than once an hour as an inverter failure may result. If frequent starts or stops are required during motor operation, use ***FWD***/***REV*** signals or the (RUN) / (STOP) keys.
	Protecting the motor	The electronic thermal function of the inverter can protect the motor. The operation level and the motor type (general-purpose motor, inverter motor) should be set. For high-speed motors or water-cooled motors, set a small value for the thermal time constant and protect the motor. If you connect the motor thermal relay to the motor with a long wire, a high-frequency current may flow into the wiring stray capacitance. This may cause the relay to trip at a current lower than the set value for the thermal relay. If this happens, lower the carrier frequency or use the output circuit filter (OFL).

Combination with peripheral devices	Discontinuance of power-factor correcting capacitor	Do not mount power-factor correcting capacitors in the inverter's primary circuit. (Use the DC reactor to improve the inverter power factor.) Do not use power-factor correcting capacitors in the inverter output circuit. An overcurrent trip will occur, disabling motor operation.
	Discontinuance of surge killer	Do not connect a surge killer to the inverter's secondary circuit.
	Reducing noise	Use of a filter and shielded wires is typically recommended to satisfy EMC directives.
	Measures against surge currents	If an overvoltage trip occurs while the inverter is stopped or operated under a light load, it is assumed that the surge current is generated by open/close of the phase-advancing capacitor in the power system. * Connect a DC reactor to the inverter.
	Megger test	When checking the insulation resistance of the inverter, use a 500 V Megger and follow the instructions contained in Chapter 7, Section 7.5 "Insulation Test."
Wiring	Control circuit wiring length	When using remote control, limit the wiring length between the inverter and operator box to 20 m or less and use twisted pair or shielded cable.
	Wiring length between inverter and motor	If long wiring is used between the inverter and the motor, the inverter will overheat or trip as a result of overcurrent (high-frequency current flowing into the stray capacitance) in the wires connected to the phases. Ensure that the wiring is shorter than 50 m. If this length must be exceeded, lower the carrier frequency or mount an output circuit filter (OFL).
	Wiring size	Select wires with a sufficient capacity by referring to the current value or recommended wire size.
	Wiring type	Do not use one multicore cable in order to connect several inverters with motors.
	Grounding	Securely ground the inverter using the grounding terminal.
Selecting inverter capacity	Driving general-purpose motor	Select an inverter according to the nominal applied motor listed in the standard specifications table for the inverter. When high starting torque is required or quick acceleration or deceleration is required, select an inverter with a capacity one size greater than the standard.
	Driving special motors	Select an inverter that meets the following condition: Inverter rated current > Motor rated current
Transportation and storage	When exporting an inverter built in a panel or equipment, pack them in a previously fumigated wooden crate. Do not fumigate them after packing since some parts inside the inverter may be corroded by halogen compounds such as methyl bromide used in fumigation. When packing an inverter alone for export, use a laminated veneer lumber (LVL). For other transportation and storage instructions, see Chapter 1, Section 1.3 "Transportation" and Section 1.4 "Storage Environment."	

How this manual is organized

This manual is made up of chapters 1 through 11.

Chapter 1 BEFORE USING THE INVERTER

This chapter describes acceptance inspection and precautions for transportation and storage of the inverter.

Chapter 2 MOUNTING AND WIRING OF THE INVERTER

This chapter provides operating environment, precautions for installing the inverter, wiring instructions for the motor and inverter.

Chapter 3 OPERATION USING THE KEYPAD

This chapter describes inverter operation using the keypad. The inverter features three operation modes (Running, Programming and Alarm modes) which enable you to run and stop the motor, monitor running status, set function code data, display running information required for maintenance, and display alarm data.

Chapter 4 OPERATION

This chapter describes preparation to be made before running the motor for a test and practical operation.

Chapter 5 FUNCTION CODES

This chapter provides a list of the function codes. Function codes to be used often and irregular ones are described individually.

Chapter 6 TROUBLESHOOTING

This chapter describes troubleshooting procedures to be followed when the inverter malfunctions or detects an alarm condition. In this chapter, first check whether any alarm code is displayed or not, and then proceed to the troubleshooting items.

Chapter 7 MAINTENANCE AND INSPECTION

This chapter describes inspection, measurement and insulation test which are required for safe inverter operation. It also provides information about periodical replacement parts and guarantee of the product.

Chapter 8 SPECIFICATIONS

This chapter lists specifications including output ratings, control system, external dimensions and protective functions.

Chapter 9 LIST OF PERIPHERAL EQUIPMENT AND OPTIONS

This chapter describes main peripheral equipment and options which can be connected to the FRENIC-Mini series of inverters.

Chapter 10 APPLICATION OF DC REACTOR (DCRs)

This chapter describes a DC reactor that suppresses input harmonic component current.

Chapter 11 COMPLIANCE WITH STANDARDS

This chapter describes standards with which the FRENIC-Mini series of inverters comply.

Icons

The following icons are used throughout this manual.

This icon indicates information which, if not heeded, can result in the inverter not operating to full efficiency, as well as information concerning incorrect operations and settings which can result in accidents.

This icon indicates information that can prove handy when performing certain settings or operations.

This icon indicates a reference to more detailed information.

Chapter 1 BEFORE USING THE INVERTER

1.1 Acceptance Inspection

Unpack the package and check that:

(1) An inverter and instruction manual (this manual) are contained in the package.

(2) The inverter has not been damaged during transportation—there should be no dents or parts missing.

(3) The inverter is the model you ordered. You can check the model name and specifications on the main nameplate. (Main and sub nameplates are attached to the inverter and are located as shown on the next page.)

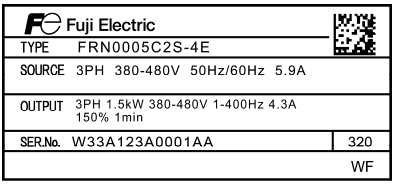

(a) Main Nameplate

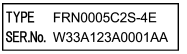

(b) Sub Nameplate

Figure 1.1 Nameplates

TYPE: Type of inverter

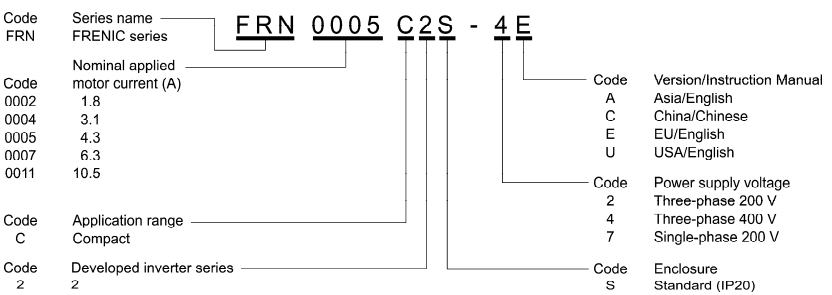

SOURCE: Number of input phases (three-phase: 3PH, single-phase: 1PH), input voltage, input frequency, input current

OUTPUT: Number of output phases, rated output capacity, rated output voltage, output frequency range, rated output current, and overload capacity

SER. No.: Product number Manufacturing date

W33A123A0001AA 320

Production week

This indicates the week number that is numbered from 1st week of January. The 1st week of January is indicated as '01'.

Production year: Last digit of year

If you suspect the product is not working properly or if you have any questions about your product, contact your Fuji Electric representative.

1.2 External Views

(1) External views

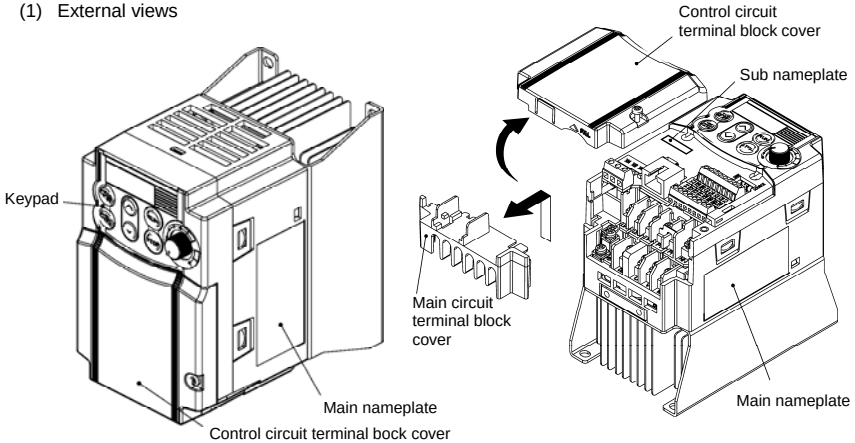

Figure 1.2 External Views of FRENIC-Mini

(2) Wiring section

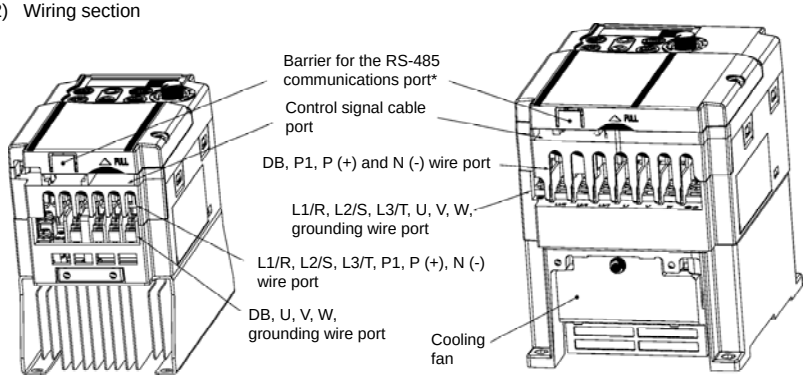

(a) FRN0006C2S-2□ (b) FRN0010C2S-2□

(* When connecting the RS-485 communications cable, remove the control circuit terminal block cover and cut off the barrier provided in it using nippers.)

Note: A box (□) in the above model names replaces A, C, E, or U depending on the shipping destination. For three-phase 200 V class series of inverters, it replaces A or U.

Figure 1.3 Wiring Section

1.3 Transportation

- When carrying the inverter, always support its bottom at the front and rear sides with both hands. Do not hold covers or individual parts only. You may drop the inverter or break it.
- Avoid applying excessively strong force to the terminal block covers as they are made of plastic and are easily broken.

1.4 Storage Environment

1.4.1 Temporary storage

Store the inverter in an environment that satisfies the requirements listed in Table 1.1.

Table 1.1 Environmental Requirements for Storage and Transportation

Item	Requirements	
Storage temperature *1	-25 to +70°C	Locations where the inverter is not subject to abrupt changes in temperature that would result in the formation of condensation or ice.
Relative humidity	5 to 95% *2	
Atmosphere	The inverter must not be exposed to dust, direct sunlight, corrosive or flammable gases, oil mist, vapor, water drops or vibration. The atmosphere can contain only a low level of salt. (0.01 mg/cm^2 or less per year)	
Atmospheric pressure	86 to 106 kPa (in storage)	
	70 to 106 kPa (during transportation)	

*1 Assuming a comparatively short storage period (e.g., during transportation or the like).

*2 Even if the humidity is within the specified requirements, avoid such places where the inverter will be subjected to sudden changes in temperature that will cause condensation to form.

Precautions for temporary storage

(1) Do not leave the inverter directly on the floor.

(2) If the environment does not satisfy the specified requirements listed in Table 1.1, wrap the inverter in an airtight vinyl sheet or the like for storage.

(3) If the inverter is to be stored in an environment with a high level of humidity, put a drying agent (such as silica gel) in the airtight package described in item (2).

1.4.2 Long-term storage

The long-term storage methods for the inverter vary largely according to the environment of the storage site. General storage methods are described below.

(1) The storage site must satisfy the requirements specified for temporary storage.

However, for storage exceeding three months, the ambient temperature should be within the range from -10 to +30°C. This is to prevent the electrolytic capacitors in the inverter from deteriorating.

(2) The inverter must be stored in a package that is airtight to protect it from moisture. Include a drying agent inside the package to maintain the relative humidity inside the package to within 70%.

(3) If the inverter has been installed in the equipment or control board at a construction site where it may be subjected to humidity, dust or dirt, then remove the inverter and store it in a suitable environment specified in Table 1.1.

Precautions for storage over 1 year

If the inverter will not be powered on for a long time, the property of the electrolytic capacitors may deteriorate. Power the inverters on once a year and keep them on for 30 to 60 minutes. Do not connect the inverters to motors or run the motor.

Chapter 2 MOUNTING AND WIRING OF THE INVERTER

2.1 Operating Environment

Install the inverter in an environment that satisfies the requirements listed in Table 2.1.

Table 2.1 Environmental Requirements

Item	Specifications	
Site location	Indoors	
Ambient temperature	-10 to +50°C (IP20) **(Note 1)**	
Relative humidity	5 to 95% (No condensation)	
Atmosphere	The inverter must not be exposed to dust, direct sunlight, corrosive gases, flammable gas, oil mist, vapor or water drops. **(Note 2)** The atmosphere can contain only a low level of salt. (0.01 mg/cm^2 or less per year) The inverter must not be subjected to sudden changes in temperature that will cause condensation to form.	
Altitude	1,000 m max. **(Note 3)**	
Atmospheric pressure	86 to 106 kPa	
Vibration	3 mm (Max. amplitude) 9.8 m/s^2 2 m/s^2 1 m/s^2	2 to less than 9 Hz 9 to less than 20 Hz 20 to less than 55 Hz 55 to less than 200 Hz

Table 2.2 Output Current Derating Factor in Relation to Altitude

Altitude	Output current derating factor
1000 m or lower	1.00
1000 to 1500 m	0.97
1500 to 2000 m	0.95
2000 to 2500 m	0.91
2500 to 3000 m	0.88

(Note 1) When inverters are mounted side-by-side without any gap between them, the ambient temperature should be within the range from -10 to +40°C.

(Note 2) Do not install the inverter in an environment where it may be exposed to cotton waste or moist dust or dirt which will clog the heat sink in the inverter. If the inverter is to be used in such an environment, install it in the panel of your system or other dustproof containers.

(Note 3) If you use the inverter in an altitude above 1000 m, you should apply an output current derating factor as listed in Table 2.2.

2.2 Installing the Inverter

(1) Mounting base

The temperature of the heat sink may rise up to approx. 90°C during operation of the inverter, so the inverter should be mounted on a base made of material that can withstand temperatures of this level.

⚠WARNING

Install the inverter on a base made of metal or other non-flammable material.
A fire may result with other material.

(2) Clearances

Ensure that the minimum clearances indicated in Figure 2.1 are maintained at all times. When installing the inverter in the panel of your system, take extra care with ventilation inside the panel as the temperature around the inverter tends to increase.

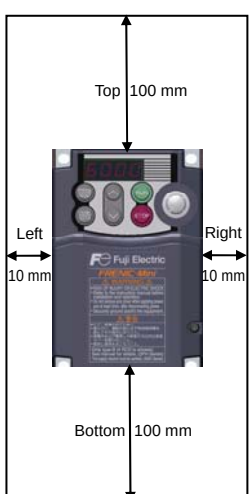

Figure 2.1 Mounting Direction and Required Clearances

When mounting two or more inverters

When mounting two or more inverters in the same unit or panel, basically lay them out side by side. As long as the ambient temperature is 40°C or lower, inverters can be mounted side by side without any clearance between them. When mounting the inverters necessarily, one above the other, be sure to separate them with a partition plate or the like so that any heat radiating from an inverter will not affect the one(s) above.

(3) Mounting direction

Secure the inverter to the mounting base with four screws or bolts (M4) so that the FRENIC-Mini logo faces outwards. Tighten those screws or bolts perpendicular to the mounting base.

Note Do not mount the inverter upside down or horizontally. Doing so will reduce the heat dissipation efficiency of the inverter and cause the overheat protection function to operate, so the inverter will not run.

⚠CAUTION
Prevent lint, paper fibers, sawdust, dust, metallic chips, or other foreign materials from getting into the inverter or from accumulating on the heat sink. **This may result in a fire or accident.**

2.3 Wiring

Follow the procedure below. (In the following description, the inverter has already been installed.)

2.3.1 Removing and mounting the terminal block covers

(1) Loosen the screw securing the control circuit terminal block cover.

(2) Insert your finger in the cutout (near "PULL") in the bottom of the control circuit terminal block cover, then pull the cover towards you.

(3) Hold both sides of the main circuit terminal block cover between thumb and forefinger and slide it towards you.

(4) After performing wiring, mount the main circuit terminal block cover and control circuit terminal block cover in the reverse order of removal.

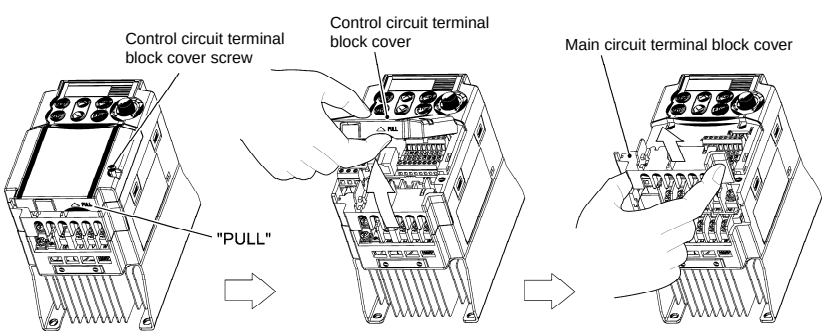

Figure 2.2 Removing the Terminal Block Covers

2.3.2 Terminal arrangement and screw specifications

The figures below show the arrangement of the main and control circuit terminals which differs according to inverter type. The two terminals prepared for grounding, which are indicated by the symbol ⏚G in Figures A to D, make no distinction between the power supply side (primary circuit) and the motor side (secondary circuit).

(1) Arrangement of the main circuit terminals

Table 2.3 Main Circuit Terminals

Power supply voltage	Nominal applied motor (kW)	Inverter type	Terminal screw size	Tightening torque (N·m)	Refer to:
Three-phase 200 V	0.1	FRN0001C2S-2☐	M3.5	1.2	Figure A
	0.2	FRN0002C2S-2☐			
	0.4	FRN0004C2S-2☐			
	0.75	FRN0006C2S-2☐			
	1.5	FRN0010C2S-2☐	M4	1.8	Figure B
	2.2	FRN0012C2S-2☐			
	3.7	FRN0020C2S-2☐			
Three-phase 400 V	0.4	FRN0002C2S-4☐			
	0.75	FRN0004C2S-4☐			
	1.5	FRN0005C2S-4☐			
	2.2	FRN0007C2S-4☐			
	3.7 (4.0)*	FRN0011C2S-4☐			
Single-phase 200 V	0.1	FRN0001C2S-7☐	M3.5	1.2	Figure C
	0.2	FRN0002C2S-7☐			
	0.4	FRN0004C2S-7☐			
	0.75	FRN0006C2S-7☐			
	1.5	FRN0010C2S-7☐	M4	1.8	Figure D
	2.2	FRN0012C2S-7☐			

Note: A box (☐) in the above table replaces A, C, E, or U depending on the shipping destination. For three-phase 200 V class series of inverters, it replaces A or U.

* 4.0 kW for the EU. The inverter type is FRN0011C2S-4E.

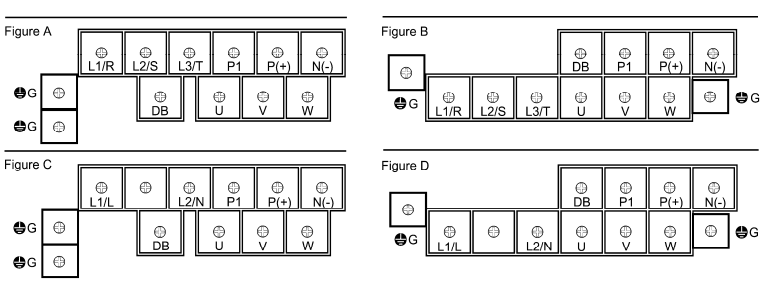

(2) Arrangement of the control circuit terminals (common to all FRENIC-Mini models)

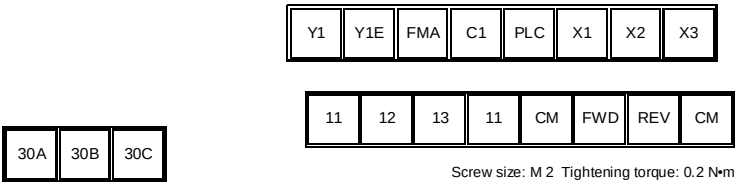

Table 2.4 Control Circuit Terminals

Terminal symbol	Screwdriver (Shape of tip, B x A) 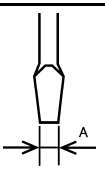 Thickness of tip: B	Allowable wire size	Bared wire length 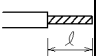	Ferrule terminal* Opening dimension in the terminal block
[30A], [30B], [30C]	Flat screwdriver (0.6 x 3.5 mm)	AWG22 to AWG18 (0.34 to 0.75 mm^2)	6 to 7 mm	2.8 (W) x 1.7 (H) mm
Other than the above	Flat screwdriver (0.5 x 2.4 mm)	AWG24 to AWG18 (0.25 to 0.75 mm^2)	5 to 6 mm	1.7 (W) x 1.4 (H) mm

* Manufacturer of ferrule terminals: WAGO Company of Japan, Ltd. Refer to Table 2.5.

Table 2.5 Recommended Ferrule Terminals

Screw size	Wire size	Type (216-□□□)			
		With insulated collar		Without insulated collar	
		Short type	Long type	Short type	Long type
M2	AWG24 (0.25 mm^2)	321	301	151	131
M2 or M2.5	AWG22 (0.34 mm^2)	322	302	152	132
	AWG20 (0.50 mm^2)	221	201	121	101
	AWG18 (0.75 mm^2)	222	202	122	102

The length of bared wires to be inserted into ferrule terminals is 5.0 mm or 8.0 mm for the short or long type, respectively.

The following crimping tool is recommended: Variocrimp 4 (Part No. 206-204).

2.3.3 Recommended wire sizes

Table 2.6 lists the recommended wire sizes. The recommended wire sizes for the main circuit terminals for an ambient temperature of 50°C are indicated for two types of wire: HIV single wire (for the maximum allowable temperature 75°C) (before a slash (/)) and IV single wire (for 60°C) (after a slash (/)),

Table 2.6 Recommended Wire Sizes

Power supply voltage	Nominal applied motor (kW)	Inverter type	Recommended wire size (mm²) *1					
			Main circuit					Control circuit
			Main circuit power input [L1/R, L2/S, L3/T] [L1/L, L2/N] Grounding [⏚G]		Inverter output [U, V, W]	DCR [P1, P (+)]	Braking resistor [P (+), DB]	
			w/ DCR	*2 w/o DCR				
Three-phase 200 V	0.1	FRN0001C2S-2□	2.0 / 2.0 (2.5)	2.0 / 2.0 (2.5)	2.0 / 2.0 (2.5)	2.0 / 2.0 (2.5)	–	0.5
	0.2	FRN0002C2S-2□						
	0.4	FRN0004C2S-2□					2.0 / 2.0 (2.5)	
	0.75	FRN0006C2S-2□						
	1.5	FRN0010C2S-2□						
	2.2	FRN0012C2S-2□						
	3.7	FRN0020C2S-2□		2.0 / 5.5 (2.5)	2.0 / 3.5 (2.5)	2.0 / 3.5 (2.5)		
Three-phase 400 V	0.4	FRN0002C2S-4□	2.0 / 2.0 (2.5)	2.0 / 2.0 (2.5)	2.0 / 2.0 (2.5)	2.0 / 2.0 (2.5)	2.0 / 2.0 (2.5)	
	0.75	FRN0004C2S-4□						
	1.5	FRN0005C2S-4□						
	2.2	FRN0007C2S-4□						
	3.7 (4.0)*	FRN0011C2S-4□						
Single-phase 200 V	0.1	FRN0001C2S-7□	2.0 / 2.0 (2.5)	2.0 / 2.0 (2.5)	2.0 / 2.0 (2.5)	2.0 / 2.0 (2.5)	–	
	0.2	FRN0002C2S-7□						
	0.4	FRN0004C2S-7□					2.0 / 2.0 (2.5)	
	0.75	FRN0006C2S-7□						
	1.5	FRN0010C2S-7□		2.0 / 3.5 (4.0)				
	2.2	FRN0012C2S-7□	2.0 / 3.5 (4.0)	3.5 / 5.5 (6.0)		2.0 / 3.5 (4.0)		

DCR: DC reactor

Note: A box (□) in the above table replaces A, C, E, or U depending on the shipping destination. For three-phase 200 V class series of inverters, it replaces A or U.

* 4.0 kW for the EU. The inverter type is FRN0011C2S-4E.

*1 Use crimp terminals covered with an insulated sheath or insulating tube. Recommended wire sizes are for HIV/IV (PVC in the EU).

*2 Wire sizes are calculated on the basis of input RMS current under the condition that the power supply capacity and impedance are 500 kVA and 5%, respectively.

*3 Insert the DC reactor (DCR) in either of the primary power input lines. Refer to Chapter 10 for more details.

2.3.4 Wiring precautions

Follow the rules below when performing wiring for the inverter.

(1) Make sure that the source voltage is within the rated voltage range specified on the nameplate.

(2) Be sure to connect the power wires to the main circuit power input terminals L1/R, L2/S and L3/T (for three-phase voltage input) or L1/L and L2/N (for single-phase voltage input) of the inverter. If the power wires are connected to other terminals, the inverter will be damaged when the power is turned on.

(3) Always connect the grounding terminal to prevent electric shock, fire or other disasters and to reduce electric noise.

(4) Use crimp terminals covered with insulated sleeves for the main circuit terminal wiring to ensure a reliable connection.

(5) Keep the power supply wiring (primary circuit) and motor wiring (secondary circuit) of the main circuit, and control circuit wiring as far away as possible from each other.

⚠WARNING⚠

- When wiring the inverter to the power source, insert a recommended molded case circuit breaker (MCCB) or residual-current-operated protective device (RCD)/earth leakage circuit breaker (ELCB) (with overcurrent protection) in the path of power lines. Use the devices within the related current range.
- Use wires in the specified size.

  Otherwise, fire could occur.
- Do not use one multicore cable in order to connect several inverters with motors.
- Do not connect a surge killer to the inverter's output (secondary) circuit.

  Doing so could cause fire.
- Be sure to connect the grounding wires without fail.

  Otherwise, electric shock or fire could occur.
- Qualified electricians should carry out wiring.
- Be sure to perform wiring after turning the power off.
- Ground the inverter in compliance with the national or local electric code.

  Otherwise, electric shock could occur.
- Be sure to perform wiring after installing the inverter body.

  Otherwise, electric shock or injuries could occur.
- Ensure that the number of input phases and the rated voltage of the product match the number of phases and the voltage of the AC power supply to which the product is to be connected.

  Otherwise, fire or an accident could occur.
- Do not connect the power source wires to output terminals (U, V, and W).
- Do not connect a braking resistor to between terminals P (+) and N (-), P1 and N (-), P (+) and P1, DB and N (-), or P1 and DB.

  Doing so could cause fire or an accident.

2.3.5 Wiring for main circuit terminals and grounding terminals

Follow the procedure below. Figure 2.3 illustrates the wiring procedure with peripheral equipment.

Wiring procedure

① Grounding terminal ⏚G*1
② Inverter output terminals (U, V, and W) and grounding terminal ⏚G*1
③ DC reactor connection terminals (P1 and P(+))*2
④ Braking resistor connection terminals (P(+) and DB)*2
⑤ DC link bus terminals (P(+) and N(-))*2
⑥ Main circuit power input terminals (L1/R, L2/S and L3/T) or (L1/L and L2/N)

*1 Use either one of these two grounding terminals on the main circuit terminal block.
*2 Perform wiring as necessary.

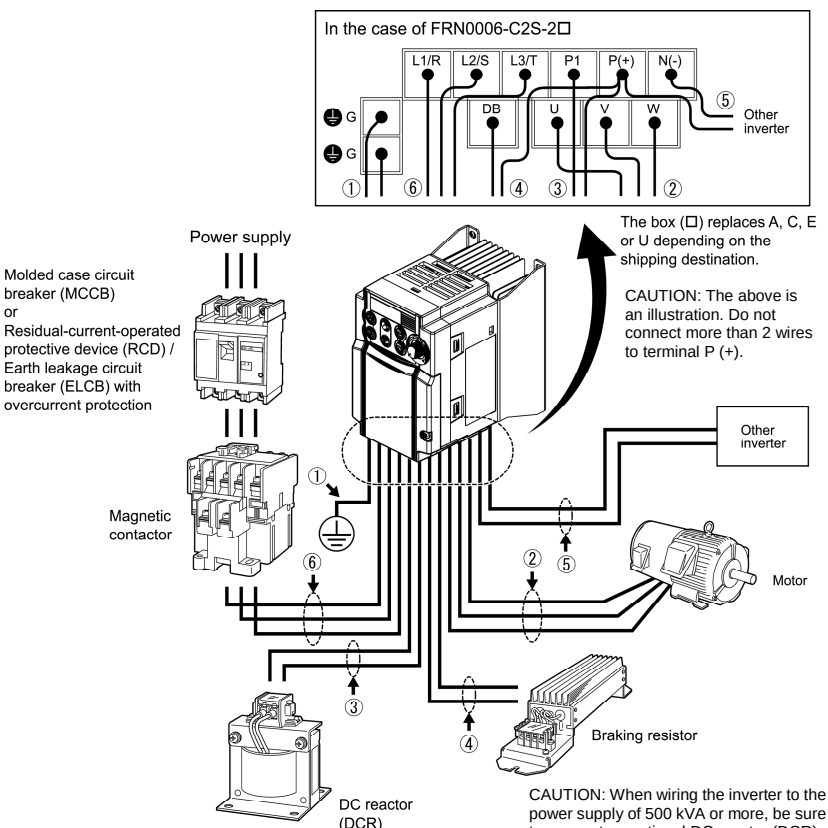

Figure 2.3 Wiring Procedure for Peripheral Equipment

The wiring procedure for the FRN0006C2S-2☐ is given below as an example. For other inverter types, perform wiring in accordance with their individual terminal arrangement. (Refer to page 2-3.)

① Grounding terminal (⏚G)

Be sure to ground either of the two grounding terminals for safety and noise reduction. It is stipulated by the Electric Facility Technical Standard that all metal frames of electrical equipment must be grounded to avoid electric shock, fire and other disasters.

Grounding terminals should be grounded as follows:

1) Ground the inverter in compliance with the national or local electric code.
2) Connect a thick grounding wire with a large surface area. Keep the wiring length as short as possible.

② Inverter output terminals, U, V, W and grounding terminal (⏚G)

1) Connect the three wires of the three-phase motor to terminals U, V, and W, aligning phases each other.
2) Connect the grounding wire of terminals U, V, and W to the grounding terminal (⏚G).

Note
- The wiring length between the inverter and motor should not exceed 50 m. If it exceeds 50 m, it is recommended that an output circuit filter (option) be inserted.
- Do not use one multicore cable to connect several inverters with motors.

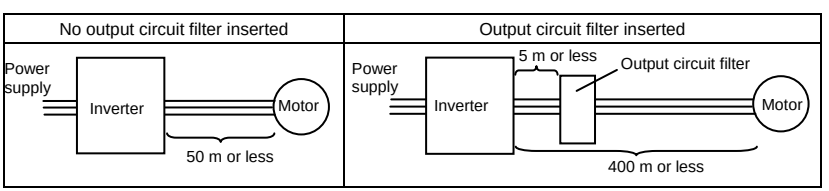

Note
- Do not connect a phase-advancing capacitor or surge absorber to the inverter's output lines (secondary circuit).
- If the wiring length is long, the stray capacitance between the wires will increase, resulting in an outflow of the leakage current. It will activate the overcurrent protection, increase the leakage current, or will not assure the accuracy of the current display. In the worst case, the inverter could be damaged.
- If more than one motor is to be connected to a single inverter, the wiring length should be the total length of the wires to the motors.

Note **Driving 400 V series motor**

- If a thermal relay is installed in the path between the inverter and the motor to protect the motor from overheating, the thermal relay may malfunction even with a wiring length shorter than 50 m. In this situation, add an output circuit filter (option) or lower the carrier frequency (Function code F26: Motor sound (Carrier frequency)).
- If the motor is driven by a PWM-type inverter, surge voltage that is generated by switching the inverter component may be superimposed on the output voltage and may be applied to the motor terminals. Particularly if the wiring length is long, the surge voltage may deteriorate the insulation resistance of the motor. Consider any of the following measures.
  - Use a motor with insulation that withstands the surge voltage. (All Fuji standard motors feature insulation that withstands the surge voltage.)
  - Connect an output circuit filter (option) to the output terminals (secondary circuits) of the inverter.
  - Minimize the wiring length between the inverter and motor (10 to 20 m or less).

③ DC reactor terminals, P1 and P (+)

1) Remove the jumper bar from terminals P1 and P(+).

2) Connect a DC reactor (option) to terminals P1 and P(+).

Note

- The wiring length should be 10 m or below.
- If both a DC reactor and a braking resistor are to be connected to the inverter, secure both wires of the DC reactor and braking resistor together to terminal P(+). (Refer to item ④ on the next page.)
- Do not remove the jumper bar if a DC reactor is not going to be used.

⚠WARNING

When wiring the inverter to the power supply of 500 kVA or more, be sure to connect an optional DC reactor (DCR).

Otherwise, fire could occur.

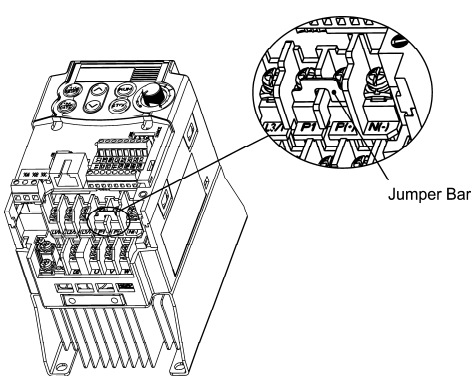

Figure 2.4 Location of Jumper Bar

④ Braking resistor terminals, P(+) and DB

1) Connect terminals P and DB of a braking resistor (option) to terminals P(+) and DB on the main circuit terminal block.
2) Arrange the inverter and braking resistor to keep the wiring length to 5 m or less and twist the two wires or route them together in parallel.

Note Do not connect a braking resistor to any inverter of FRN0002C2S-2☐/-7☐ or below. (Even if connected, the braking resistor will not work.)

⚠WARNING
Never insert a braking resistor between terminals P(+) and N(-), P1 and N(-), P(+) and P1, DB and N(-), or P1 and DB. **Doing so could cause fire.**

When a DC reactor is not to be connected together with the braking resistor

1) Remove the screws from terminals P(+) and P1, together with the jumper bar.
2) Connect the wire from terminal P of the braking resistor to terminal P(+) of the inverter and put the jumper bar back into place. Then secure the wire and jumper bar with the screw.
3) Tighten the screw of terminal P1 on the jumper bar.
4) Connect the wire from terminal DB of the braking resistor to the DB of the inverter.

When connecting a DC reactor together with the braking resistor

1) Remove the screw from terminal P(+).
2) Overlap the DC reactor wire and braking resistor wire (P) and then secure them to terminal P(+) of the inverter with the screw.
3) Connect the wire from terminal DB of the braking resistor to terminal DB of the inverter.
4) Do not use the jumper bar.

⑤ DC link bus terminals, P (+) and N (-)

These are provided for the DC link bus powered system. Connect these terminals with terminals P(+) and N (-) of other inverters.

Note Consult your Fuji Electric representative if these terminals are to be used.

⑥ Main circuit power input terminals, L1/R, L2/S, and L3/T (for three-phase voltage input) or L1/L and L2/N (for single-phase voltage input)

1) For safety, make sure that the molded case circuit breaker (MCCB) or magnetic contactor (MC) is turned off before wiring the main circuit power input terminals.
2) Connect the main circuit power supply wires (L1/R, L2/S and L3/T or L1/L and L2/N) to the input terminals of the inverter via an MCCB or residual-current-operated protective device (RCD)/earth leakage circuit breaker (ELCB)*, and MC if necessary.

   It is not necessary to align phases of the power supply wires and the input terminals of the inverter with each other.

   * With overcurrent protection

Tip It is recommended that a magnetic contactor be inserted which can be manually activated. This is to allow you to disconnect the inverter from the power supply in an emergency (e.g., when the protective function is activated) so as to prevent a failure or accident from causing the secondary problems.

2.3.6 Wiring for control circuit terminals

⚠WARNING⚠

In general, sheaths and covers of the control signal cables and wires are not specifically designed to withstand a high electric field (i.e., reinforced insulation is not applied). Therefore, if a control signal cable or wire comes into direct contact with a live conductor of the main circuit, the insulation of the sheath or the cover might break down, which would expose the signal wire to a high voltage of the main circuit. Make sure that the control signal cables and wires will not come into contact with live conductors of the main circuit.

Failure to observe these precautions could cause electric shock and/or an accident.

⚠CAUTION

Noise may be emitted from the inverter, motor and wires.

Implement appropriate measure to prevent the nearby sensors and devices from malfunctioning due to such noise.

An accident could occur.

Table 2.8 lists the symbols, names and functions of the control circuit terminals. The wiring to the control circuit terminals differs depending upon the setting of the function codes, which reflects the use of the inverter.

Put back the main circuit terminal block cover and then connect wires to the control circuit terminals. Route these wires correctly to reduce the influence of noise.

Table 2.8 Symbols, Names and Functions of the Control Circuit Terminals

Classification	Symbol	Name	Functions
Analog input	[13]	Power supply for potentiometer	Power supply (+10 VDC) for an external frequency command potentiometer (Potentiometer: 1 to 5 kΩ) A potentiometer of 1/2 W rating or more should be connected.
	[12]	Analog setting voltage input	(1) The frequency is commanded according to the external analog input voltage. 0 to +10 (VDC)/0 to 100 (%) (Normal operation) +10 to 0 (VDC)/0 to 100 (%) (Inverse operation) (2) Used for reference signal (PID process command) or PID feedback signal. (3) Used as additional auxiliary setting for various main frequency commands. * Input impedance: 22 kΩ * The allowable maximum input is +15 VDC; however, the voltage higher than +10 VDC is treated as +10 VDC.
	[C1]	Current input	(1) The frequency is commanded according to the external analog input current. +4 to +20 mA DC/0 to 100% (Normal operation) +20 to +4 mA DC/0 to 100% (Inverse operation) +0 to +20 mA DC/0 to 100% (Normal operation) +20 to 0 mA DC/0 to 100% (Inverse operation) (2) Used for reference signal (PID process command) or PID feedback signal. (3) Connects PTC (Positive Temperature Coefficient) thermistor for motor protection. (4) Used as additional auxiliary setting for various main frequency commands. * Input impedance: 250Ω * The allowable maximum input is +30 mA DC; however, the current larger than +20 mA DC is treated as +20 mA DC. 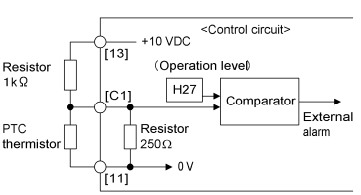 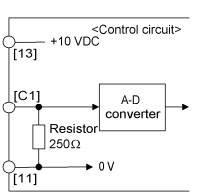
	[11]	Analog common	Common terminal for analog input and output signals This terminal is electrically isolated from terminals [CM] and [Y1E].

Table 2.8 Symbols, Names and Functions of the Control Circuit Terminals (Continued)

Classification	Symbol	Name	Functions
Analog input			

Note

- These low level analog signals are especially susceptible to the external noise effects. Route the wiring as short as possible (within 20 m) and use shielded wires. In principle, ground the shielded sheath of wires; if effects of external inductive noises are considerable, connection to terminal [11] may be effective. As shown in Figure 2.5, ground the single end of the shield to enhance the shield effect.
- Use a twin-contact relay for low level signals if the relay is used in the control circuit. Do not connect the relay's contact to terminal [11].
- When the inverter is connected to an external device outputting analog signals, the external device may malfunction due to electric noise generated by the inverter. If this happens, according to the circumstances, connect a ferrite core (a toroidal core or equivalent) to the device outputting analog signals or connect a capacitor having the good cut-off characteristics for high frequency between control signal wires as shown in Figure 2.6.
- Do not apply a voltage of +7.5 VDC or higher to terminal [C1]. Doing so could damage the internal control circuit.

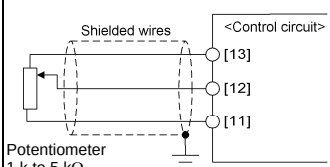

Figure 2.5 Connection of Shielded Wire

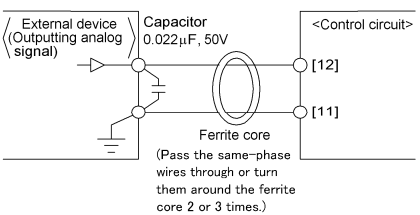

Figure 2.6 Example of Electric Noise Reduction

Table 2.8 Symbols, Names and Functions of the Control Circuit Terminals (Continued)

<table>
<tr><th>Classification</th><th>Symbol</th><th>Name</th><th>Functions</th></tr>
<tr><td rowspan="6">Digital input</td><td>[X1]</td><td>Digital input 1</td><td rowspan="5">(1) The various signals such as "Coast to a stop," "Enable external alarm trip," and "Select multistep frequency" can be assigned to terminals [X1] to [X3], [FWD] and [REV] by setting function codes E01 to E03, E98, and E99. For details, refer to Chapter 5, Section 5.2 "Details of Function Codes."
(2) Input mode, i.e. Sink/Source, is changeable by using the internal jumper switch.
(3) Switches the logic value (1/0) for ON/OFF of the terminals between [X1] to [X3], [FWD] or [REV], and [CM]. If the logic value for ON between [X1] and [CM] is 1 in the normal logic system, for example, OFF is 1 in the negative logic system and vice versa.
(4) The negative logic signaling cannot be applicable to [FWD] and [REV].
Digital input circuit specifications
 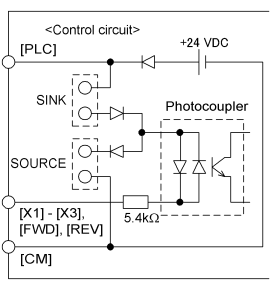

<table>
<tr><th colspan="2">Item</th><th>Min.</th><th>Max.</th></tr>
<tr><td rowspan="2">Operation voltage (SINK)</td><td>ON level</td><td>0 V</td><td>2 V</td></tr>
<tr><td>OFF level</td><td>22 V</td><td>27 V</td></tr>
<tr><td rowspan="2">Operation voltage (SOURCE)</td><td>ON level</td><td>22 V</td><td>27 V</td></tr>
<tr><td>OFF level</td><td>0 V</td><td>2 V</td></tr>
<tr><td colspan="2">Operation current at ON (Input Voltage at 0 V)</td><td>2.5 mA</td><td>5 mA</td></tr>
<tr><td colspan="2">Allowable leakage current at OFF</td><td>-</td><td>0.5 mA</td></tr>
</table></td></tr>
<tr><td>[X2]</td><td>Digital input 2</td></tr>
<tr><td>[X3]</td><td>Digital input 3</td></tr>
<tr><td>[FWD]</td><td>Run forward command</td></tr>
<tr><td>[REV]</td><td>Run reverse command</td></tr>
<tr><td>[PLC]</td><td>PLC signal power</td><td colspan="2">Connects to PLC output signal power supply.
Rated voltage: +24 VDC (Allowable range: +22 to +27 VDC), Max. 50 mA</td></tr>
<tr><td>[CM]</td><td>Digital common</td><td colspan="2">Common terminal for digital input signals
This terminal is electrically isolated from terminals [11] and [Y1E].</td></tr>
</table>

Table 2.8 Symbols, Names and Functions of the Control Circuit Terminals (Continued)

Classification	Symbol	Name	Functions
Digital input			

Tip

■ **Using a relay contact to turn [X1], [X2], [X3], [FWD] or [REV] ON or OFF**

Figure 2.7 shows two examples of a circuit that uses a relay contact to turn control signal input [X1], [X2], [X3], [FWD] or [REV] ON or OFF. Circuit (a) has a connecting jumper applied to SINK, whereas circuit (b) has one that is applied to SOURCE.

Note: To configure this kind of circuit, use a highly reliable relay.
(Recommended product: Fuji control relay Model HH54PW)

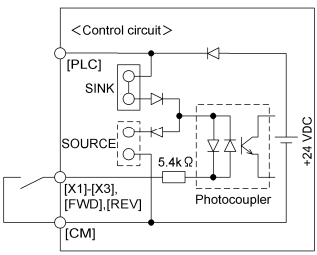

(a) With a jumper applied to SINK

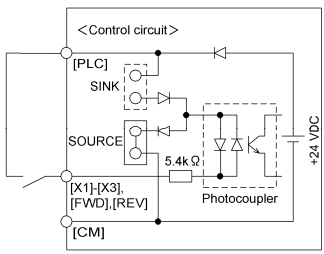

(b) With a jumper applied to SOURCE

Figure 2.7 Circuit Configuration Using a Relay Contact

■ **Using a programmable logic controller (PLC) to turn [X1], [X2], [X3], [FWD] or [REV] ON or OFF**

Figure 2.8 shows two examples of a circuit that uses a programmable logic controller (PLC) to turn control signal input [X1], [X2], [X3], [FWD] or [REV] ON or OFF. Circuit (a) has a connecting jumper applied to SINK, whereas circuit (b) has one that is applied to SOURCE.

In circuit (a) below, short-circuiting or opening the transistor's open collector circuit in the PLC using an external power source turns control signal [X1], [X2], [X3], [FWD] or [REV] ON or OFF. When using this type of circuit, observe the following:

- Connect the + node of the external power source (which should be isolated from the PLC's power) to terminal [PLC] of the inverter.
- Do not connect terminal [CM] of the inverter to the common terminal of the PLC.

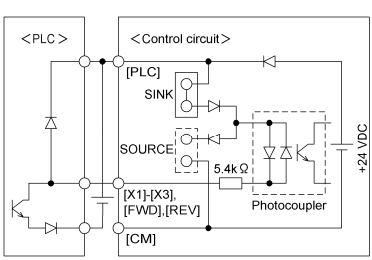

(a) With a jumper applied to SINK

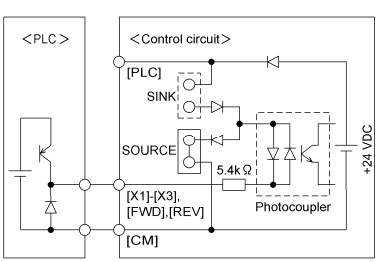

(b) With a jumper applied to SOURCE

Figure 2.8 Circuit Configuration Using a PLC

For details about the jumper setting, refer to Section 2.3.7 "Setting up the jumper switches."

Table 2.8 Symbols, Names and Functions of the Control Circuit Terminals (Continued)

Classification	Symbol	Name	Functions
Analog output	[FMA]	Analog monitor	The monitor signal for analog DC voltage (0 to +10 VDC) is output. The signal functions can be selected from the following with function code F31. - Output frequency (before slip compensation) - Output frequency (after slip compensation) - Output current - Output voltage - Input power - PID feedback amount - DC link bus voltage - Calibration - PID command (SV) - PID output (MV) *Input impedance of external device: Min. 5 kΩ
	[11]	Analog common	Common terminal for analog input and output signals This terminal is electrically isolated from terminals [CM] and [Y1E].
Transistor output	[Y1]	Transistor output	(1) Various signals such as "Inverter running," "Frequency arrival signal" and "Motor overload early warning" can be assigned to terminal [Y1] by setting function code E20. Refer to Chapter 5, Section 5.2 "Details of Function Codes." (2) Switches the logic value (1/0) for ON/OFF of the terminals between [Y1] and [Y1E]. If the logic value for ON between [Y1] and [Y1E] is 1 in the normal logic system, for example, OFF is 1 in the negative logic system and vice versa. Digital input circuit specification 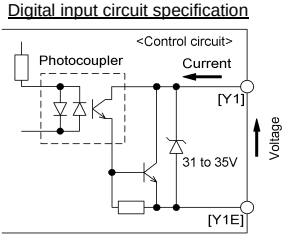 Figure 2.9 shows examples of connection between the control circuit and a PLC. Note - Check the polarity of the external power inputs. - When connecting a control relay, first connect a surge-absorbing diode across the coil of the relay.
	[PLC]	Transistor output power	Power source of +24 VDC to be fed to the transistor output circuit load (50 mA at maximum). To enable the source, it is necessary to short-circuit between terminals [Y1E] and [CM]. Can also be used as a 24 VDC power source.
	[Y1E]	Transistor output common	Common terminal for transistor output signal This terminal is electrically Isolated from terminals [CM] and [11].

Table 2.8 Symbols, Names and Functions of the Control Circuit Terminals (Continued)

Classification	Symbol	Name	Functions
Transistor output			**■ Connecting programmable controller (PLC) to terminal [Y1]** Figure 2.9 shows two examples of circuit connection between the transistor output of the inverter's control circuit and a PLC. In example (a), the input circuit of the PLC serves as a sink for the control circuit, whereas in example (b), it serves as a source for the control circuit. 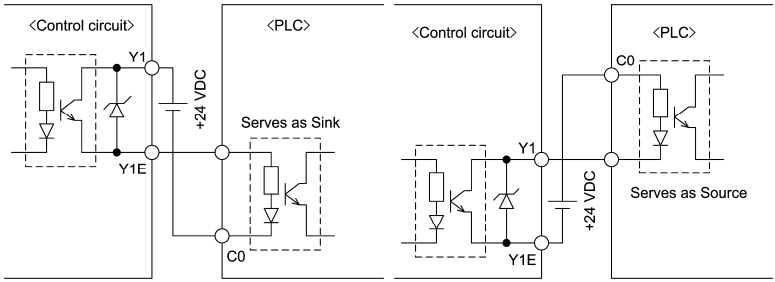 (a) PLC serving as sink (b) PLC serving as source Figure 2.9 Connecting PLC to Control Circuit
Relay contact output	[30A], [30B], [30C]	Alarm relay output (for any fault)	(1) Outputs a contact signal (SPDT) when a protective function has been activated to stop the motor. Contact rating: 250 VAC 0.3A cos ϕ = 0.3 +48 VDC, 0.5A (2) A command similar to terminal [Y1] can be selected for the transistor output signal and use it for signal output. (3) Switching of the normal/negative logic output is applicable to the following two contact outputs: "Terminals [30A] and [30C] are short-circuited for ON signal output" or "Terminals [30B] and [30C] are short-circuited (non-excite) for ON signal output."
Communication	RJ-45 connector (RS-485)		(1) Used to connect an optional keypad to the inverter. (2) Used to connect the inverter to a computer running FRENIC Loader via the RS-485 communications link. (For the terminating resistor, refer to Section 2.3.7.) 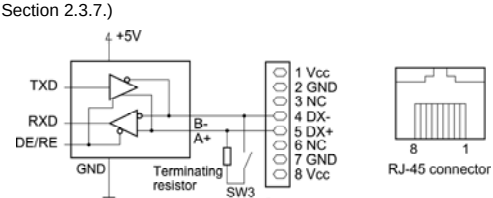 Figure 2.10 RJ-45 Connector and its Pin Assignment *Pins 1, 2, 7 and 8 are exclusively assigned to power lines for an optional keypad. When connecting any other device to the RJ-45 connector, do not use those pins. For the location of the RJ-45 connector, refer to Figure 2.11 "Locations of Jumper Switches and RJ-45 Connector."

Note
- Route the wiring of the control terminals as far from the wiring of the main circuit as possible. Otherwise electric noise may cause malfunctions.
- Fix the control circuit wires inside the inverter to keep them away from the live parts of the main circuit (such as the terminal block of the main circuit).
- The pin assignment of the RJ-45 connector on the FRENIC-Mini series is different from that of the RJ-45 connector on the FVR-E11S series keypad. Do not connect them with each other; doing so may cause a short-circuiting or collision of signal lines, resulting in a broken inverter.

2.3.7 Setting up the jumper switches

⚠ WARNING ⚠

Before changing the jumper switches, turn OFF the power and wait at least five minutes. Make sure that the LED monitor is turned OFF. Further, make sure, using a multimeter or a similar instrument, that the DC link bus voltage between terminals P (+) and N (-) has dropped to the safe level (+25 VDC or below).

An electric shock may result if this warning is not heeded as there may be some residual electric charge in the DC link bus capacitor even after the power has been turned OFF.

Switching the jumper switches (shown in Figure 2.11) allows you to customize the specifications of the digital I/O terminals and the RS-485 communication terminating resistor.

To access the jumper switches, remove the terminal block covers.

For details on how to remove the terminal block covers, refer to Section 2.3.1.

Table 2.9 lists function of each jumper switch.

Table 2.9 Function of Jumper Switches

Switch	Function
① SW1	SINK/SOURCE switch for digital input terminals • To use digital input terminals [X1] to [X3], [FWD] and [REV] in the SINK mode, set a jumper in the sink position, to use them in the SOURCE mode, set a jumper in the source position. (See Figure 2.11.) • To switch between SINK and SOURCE modes, use a mini needle-nose pliers or the similar tool to change the mounting position of the jumper.
② SW3	Terminating resistor ON/OFF switch for RS-485 communication • To connect an optional remote keypad, set a jumper in the OFF position (factory default). • If the inverter is connected to the RS-485 communications network as a terminating device, set a jumper in the ON position. • To switch the terminating resistor ON and OFF, use a mini needle-nose pliers or the similar tool to change the mounting position of the jumper.

Figure 2.11 shows the locations of jumper switches and the RJ-45 connector.

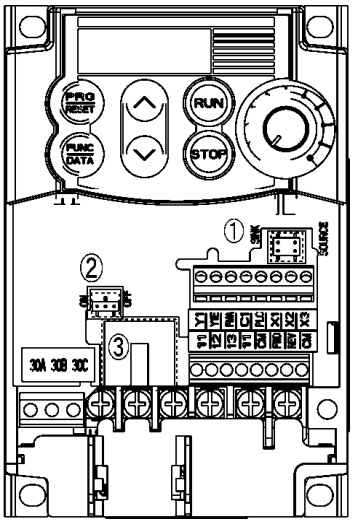

① SW1	SINK (Factory default for FRN_ _ _ _C2S-_A, C, U)	SOURCE (Factory default for FRN_ _ _ _C2S-_E)
② SW3	ON	OFF (Factory default for all inverter types)
③	RJ-45 connector	

Figure 2.11 Locations of Jumper Switches and RJ-45 Connector

2.3.8 Cautions relating to harmonic component, noise, and leakage current

(1) Harmonic component

Input current to an inverter includes a harmonic component that may affect other motors and phase-advancing capacitors on the same power supply line. If the harmonic component causes any problems, connect a DC reactor (option) to the inverter. In some cases, it is necessary to insert a reactor in series with the phase-advancing capacitors.

(2) Noise

If noise generated from the inverter affects other devices, or that generated from peripheral equipment causes the inverter to malfunction, follow the basic measures outlined below.

1) If noise generated from the inverter affects the other devices through power wires or grounding wires:
   - Isolate the grounded metal frames of the inverter from those of the other devices.
   - Connect a noise filter to the inverter power wires.
   - Isolate the power system of the other devises from that of the inverter with an insulated transformer.

2) If induction or radio noise generated from the inverter affects other devices through power wires or grounding wires:
   - Isolate the main circuit wires from the control circuit wires and other device wires.
   - Put the main circuit wires through a metal conduit and connect the pipe to the ground near the inverter.
   - Mount the inverter on the metal switchboard and connect the whole board to the ground.
   - Connect a noise filter to the inverter power wires.

3) When implementing measures against noise generated from peripheral equipment:
   - For the control signal wires, use twisted or shielded-twisted wires. When using shielded-twisted wires, connect the shield of the shielded wires to the common terminals of the control circuit.
   - Connect a surge absorber in parallel with a coil or solenoid of the magnetic contactor.

(3) Leakage current

A high frequency current component generated by insulated gate bipolar transistors (IGBTs) switching on/off inside the inverter becomes leakage current through stray capacitance of inverter input and output wires or a motor. If any of the problems listed below occurs, take appropriate measures against them.

Table 2.10 Leakage Current Countermeasures

Problem	Measures
An earth leakage circuit breaker* that is connected to the input (primary) side has tripped. *With overcurrent protection	1) Decrease the carrier frequency. 2) Make the wires between the inverter and motor shorter. 3) Use an earth leakage circuit breaker (ELCB) with lower sensitivity than the one currently used. 4) Use an earth leakage circuit breaker that features measures against the high frequency current component (Fuji SG and EG series).
An external thermal relay was activated.	1) Decrease the carrier frequency. 2) Increase the settling current of the thermal relay. 3) Use the electronic thermal overload protection built in the inverter.

Chapter 3 OPERATION USING THE KEYPAD

3.1 Names and Functions of Keypad Components

As shown in the figure at right, the keypad consists of a four-digit 7-segment LED monitor, a potentiometer (POT), and six keys.

The keypad allows you to start and stop the motor, monitor running status, configure the function code data, check I/O signal states, and display maintenance information and alarm information.

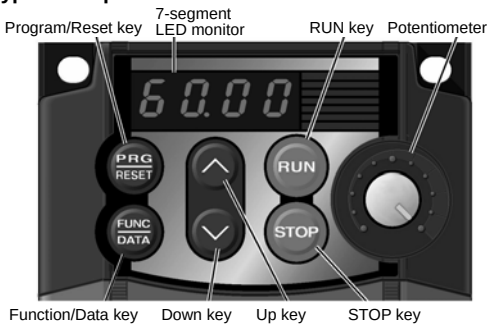

Table 3.1 Names and Functions of Keypad Components

Monitor, Potentiometer and Keys	Functions
60.00	Four-digit, 7-segment LED monitor which displays the following according to the operation modes *. ■ In Running mode: Running status information (e.g., output frequency, current, and voltage) ■ In Programming mode: Menus, function codes and their data ■ In Alarm mode: Alarm code which identifies the error factor if the protective function is activated.
	Potentiometer (POT) which is used to manually set a reference frequency, auxiliary frequencies 1 and 2 or PID process command.
RUN	RUN key. Press this key to run the motor.
STOP	STOP key. Press this key to stop the motor.
∧ / ∨	UP/DOWN keys. Press these keys to select the setting items and change the function code data displayed on the LED monitor.
PRG RESET	Program/Reset key which switches the operation modes* of the inverter. ■ In Running mode: Pressing this key switches the inverter to Programming mode. ■ In Programming mode: Pressing this key switches the inverter to Running mode. ■ In Alarm mode: Pressing this key after removing the error factor switches the inverter to Running mode.
FUNC DATA	Function/Data key which switches the operation you want to do in each mode as follows: ■ In Running mode: Pressing this key switches the information to be displayed concerning the status of the inverter (output frequency, output current, output voltage, etc.). ■ In Programming mode: Pressing this key displays the function codes and sets their data entered with the ∧ and ∨ keys or the POT. ■ In Alarm mode: Pressing this key displays detailed alarm information.

* FRENIC-Mini features three operation modes: Running, Programming, and Alarm. Refer to Section 3.2 "Overview of Operation Modes."

■ Simultaneous keying

Simultaneous keying means pressing two keys at the same time (expressed by "+"). FRENIC-Mini supports simultaneous keying as listed below.

(For example, the expression "STOP + ▲ keys" stands for pressing the ▲ key while holding down the STOP key.)

Table 3.2 Simultaneous Keying

Operation mode	Simultaneous keying	Used to:
Running mode	STOP + ▲ keys	Control entry to/exit from jogging operation.
Programming mode	STOP + ▲ keys	Change certain function code data. (Refer to function codes F00, H03, H45 and H97 in Chapter 5 "FUNCTION CODES.")
	STOP + ▼ keys	
Alarm mode	STOP + PRG/RESET keys	Switch to Programming mode without clearing alarms.

■ About changing of function code data

The function code data can be changed only when the data value displayed on the LED monitor is flashing.

When the data value is lit, no change is allowed. To change the data, stop the inverter or disable the data protection.

3.2 Overview of Operation Modes

FRENIC-Mini features the following three operation modes:

- ■ Running mode : This mode allows you to enter run/stop commands in regular operation. You can also monitor the running status in real time.
- ■ Programming mode : This mode allows you to configure function code data and check a variety of information relating to the inverter status and maintenance.
- ■ Alarm mode : If an alarm occurs, the inverter automatically enters the Alarm mode. In this mode, you can view the corresponding alarm code* and its related information on the LED monitor.

* Alarm code: Indicates the cause of the alarm condition that has triggered the protective function. For details, refer to Chapter 8, Section 8.5 "Protective Functions."

Figure 3.1 shows the status transition of the inverter between these three operation modes.

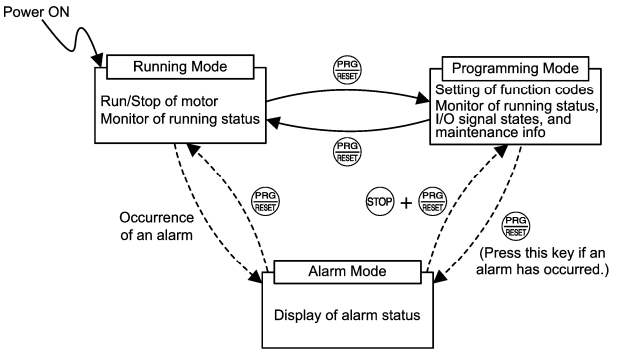

Figure 3.1 Status Transition between Operation Modes

Figure 3.2 illustrates the transition of the LED monitor screen during the Running mode, the transition between menu items in the Programming mode, and the transition between alarm codes at different occurrences in the Alarm mode.

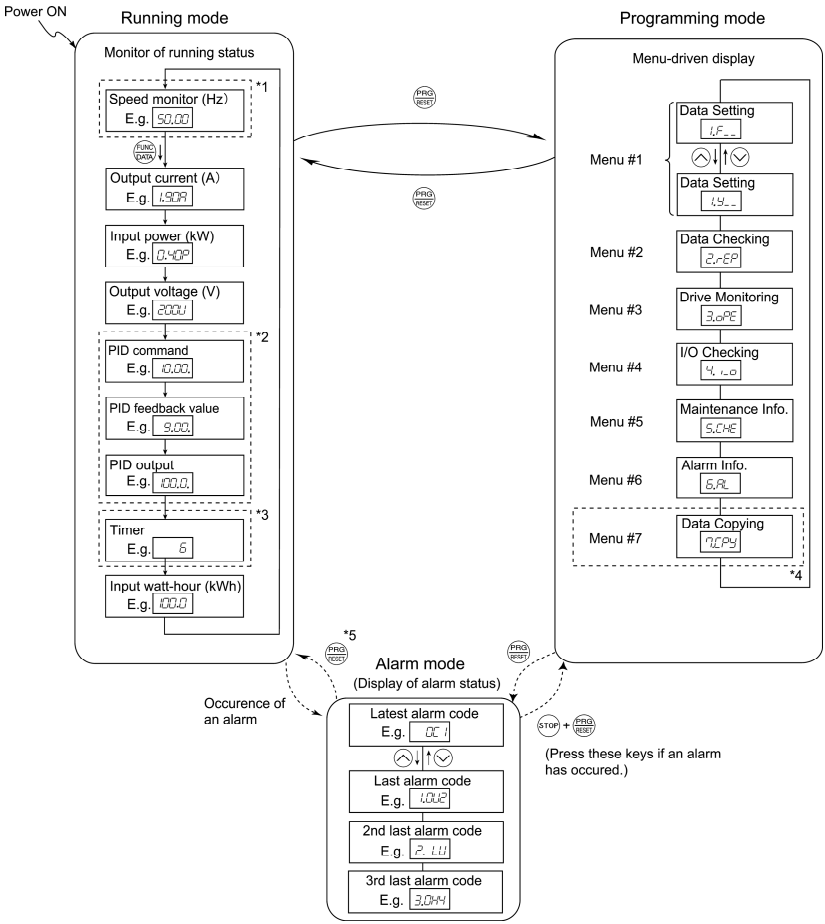

*1 In speed monitor, you can display any of the following according to the setting of function code E48: Output frequency (Hz), Reference frequency (Hz), Load shaft speed (r/min), Line speed (m/min), and Constant rate of feeding time (min).

*2 Applicable only when PID control is employed.

*3 Applicable only when timer operation is selected by the setting of function code C21.

*4 Applicable only when the remote keypad (option) is connected to the inverter.

*5 Alarm can be reset with the PRG RESET key only when the current alarm code is displayed.

Figure 3.2 Transition between Basic Display Screens by Operation Mode

3.3 Running mode

When the inverter is turned on, it automatically enters Running mode. In Running mode, you can:

(1) Monitor the running status (e.g., output frequency, output current),

(2) Set up the reference frequency and PID process command, and

(3) Run/stop the motor.

3.3.1 Monitoring the running status

In Running mode, the nine items listed below can be monitored. Immediately after the inverter is turned ON, the monitor item specified by function code E43 is displayed. Press the (FUNC/DATA) key to switch between these monitor items.

Table 3.3 Monitor Items

Monitor Items	Display Sample on the LED monitor (Note 1)	Meaning of Displayed Value	Function Code Data for E43
Speed monitor	Function code E48 specifies what to be displayed on the LED monitor.		0
Output frequency (before slip compensation) (Hz)	50.00	Pre-slip compensation frequency	(E48 = 0)
Output frequency (after slip compensation) (Hz)	50.00	Frequency actually being output	(E48 = 1)
Reference frequency (Hz)	50.00	Final reference frequency	(E48 = 2)
Load shaft speed (r/min)	300.0	Output frequency (Hz) x E50	(E48 = 4)
Line speed (m/min)	300.0	Output frequency (Hz) x E50	(E48 = 5)
Constant feeding rate time (min)	50	$\frac{\text{E50}}{\text{Output frequency x E39}}$	(E48 = 6)
Output current (A)	1.90A	Current output from the inverter in RMS	3
Input power (kW)	0.40P	Input power to the inverter	9
Output voltage (V) (Note 2)	200U	Voltage output from the inverter in RMS	4
PID command (Note 3)(Note 4)	10.00.	PID command/PID feedback amount trans-formed to the virtual physical value of the object to be controlled	10
PID feedback amount (Note 3)(Note 5)	9.00.	Refer to function codes E40 and E41.	12
PID output (Note 3)(Note 4)	100.0.	PID output in %, assuming the maximum fre-quency (F03) as 100%	14
Timer (sec) (Note 3)	50	Remaining effective timer count	13
Input watt-hour	100.0	Display value = $\frac{\text{Input watt-hour (kWh)}}{100}$	25

(Note 1) A value 10000 or above cannot be displayed on the 4-digit LED monitor screen, so "[ ]" appears instead.

(Note 2) When the LED monitor displays an output voltage, the 7-segment letter U in the lowest digit stands for the unit of the voltage "V."

(Note 3) These PID related items appear only under PID control (J01 = 1 or 2).

The timer (for timer operation) appears only when timer operation is enabled (C21 = 1).

When the PID control or timer operation is disabled, "----" appears instead.

(Note 4) When the LED monitor displays a PID command or its output amount, the dot (decimal point) attached to the lowest digit of the 7-segment letter blinks.

(Note 5) When the LED monitor displays a PID feedback amount, the dot (decimal point) attached to the lowest digit of the 7-segment letter lights.

3.3.2 Setting up reference frequency and PID process command

You can set up the desired frequency command and PID process command by using the potentiometer and ⌃ and ⌄ keys on the keypad. You can also set up the reference frequency as frequency, load shaft speed, line speed, and constant rate of feeding time by setting function code E48.

■ Setting up the reference frequency

Using the built-in potentiometer (factory default)

Setting function code F01 to "4: Built-in potentiometer (POT)" (factory default) allows you to specify the reference frequency using the potentiometer.

Using the ⌃ and ⌄ keys

(1) Set function code F01 to "0: ⌃ / ⌄ keys on the built-in keypad." In Programming mode or Alarm mode, the ⌃ / ⌄ keys cannot be used for setting the reference frequency, so switch to Running mode.

(2) Press the ⌃ or ⌄ key to display the reference frequency with the lowest digit blinking.

(3) To change the reference frequency, press the ⌃ or ⌄ key again. The new setting will be automatically saved into the inverter's memory. It is kept there even if the inverter is powered off, and it will be used as the initial frequency next time the inverter is powered on.

Tip

- If you have set the function code F01 to "0: ⌃ / ⌄ keys on the built-in keypad" but have selected a frequency setting other than frequency 1 (i.e., frequency 2, Via communications, or Multistep frequency), then the ⌃ or ⌄ key cannot be used for setting up the reference frequency even if the keypad is in Running mode. Pressing either of these keys will just display the currently selected reference frequency.
- When you start changing the reference frequency or any other parameter with the ⌃ or ⌄ key, the lowest digit on the display will blink and start changing. As you are holding the key down, blinking will gradually move to the upper digit places and the upper digits will be changeable.
- If you press the ⌃ or ⌄ key once and then hold down the PRG/RESET key for more than 1 second after the lowest digit starts blinking, blinking will move to the next upper digit place to allow you to change the value of that digit (cursor movement). This way you can easily change the values of the higher digits.
- By setting function code C30 to "0: ⌃ / ⌄ keys on the built-in keypad" and selecting frequency set 2 as the frequency setting method, you can also specify or change the reference frequency in the same manner using the ⌃ and ⌄ keys.

■ Setting up the PID process command

To enable PID control, you need to set function code J01 to "1" or "2."

📖 Refer to the FRENIC-Mini User's Manual for details on the PID control.

Setting the PID process command with the built-in potentiometer

(1) Set function code E60 to "3: PID process command 1."

(2) Set function code J02 to "1: PID process command 1."

Setting the PID process command with the ^ and v keys

(1) Set function code J02 to "0: ^ / v keys on the built-in keypad."

(2) Set the LED monitor to an item other than the speed monitor (E43 = 0) in Running mode. In Programming mode or Alarm mode, the ^ / v keys cannot be used for setting the PID process command, so switch to Running mode.

(3) Press the ^ or v key to display the PID process command. The lowest digit of the displayed command and the decimal point blink.

(4) To change the PID process command, press the ^ or v key again. The new PID process command will be automatically saved into the inverter's memory. It is kept there even if the inverter is switched to any other PID process command entry method and then returned to the keypad entry method. Also, it is kept there even if the inverter is powered off, and it will be used as the initial PID process command next time the inverter is powered on.

Tip

- Even if multistep frequency is selected as a PID process command (***SS4*** = ON), you still can set the process command using the keypad.
- When function code J02 data has been set to any value except "0," pressing the ^ or v key displays the currently selected PID process command but does not allow any change of the setting.
- When a PID process command is displayed, the decimal point next to the lowest digit on the LED display blinks to distinguish it from the regular frequency setting. When a PID feedback amount is displayed, the decimal point is lit.

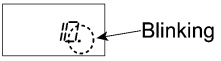

3.3.3 Running/stopping the motor

By factory default, pressing the RUN key starts running the motor in the forward direction and pressing the STOP key decelerates the motor to stop. The RUN key is enabled only in Running mode.

By changing the setting of function code F02, you can change the starting direction of motor rotation; for example, you can have the motor start running in the reverse direction or in accordance with the wiring connection at the terminal block.

■ **Operational relationship between function code F02 (Operation method) and RUN key**

Table 3.4 lists the relationship between function code F02 settings and the RUN key, which determines the motor rotation direction.

Table 3.4 Rotation Direction of Motor, Specified by F02

If Function code F02 is set to:	Pressing the RUN key rotates the motor:
2	in the forward direction
3	in the reverse direction

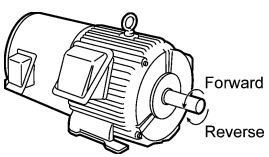

(Note) The rotation direction of IEC-compliant motors is opposite to the one shown here.

For the details of operation with function code F02 set to "0" or "1," refer to Chapter 5.

3.4 Programming mode

Programming mode provides you with these functions--setting and checking function code data, monitoring maintenance information and checking input/output (I/O) signal status. The functions can be easily selected with the menu-driven system. Table 3.5 lists menus available in Programming mode. The leftmost digit (numerals) of each letter string indicates the corresponding menu number and the remaining three digits indicate the menu contents.

When the inverter enters Programming mode from the second time on, the menu that was selected last in Programming mode will be displayed.

Table 3.5 Menus Available in Programming Mode

Menu #	Menu	LED monitor shows:	Main functions		Refer to:
#1	"Data setting"	1F__	F codes (Fundamental functions)	Selecting each of these function codes enables its data to be displayed/changed.	Section 3.4.1
		1E__	E codes (Extension terminal functions)		
		1C__	C codes (Control functions of frequency)		
		1P__	P codes (Motor 1 parameters)		
		1H__	H codes (High performance functions)		
		1A__	A codes (Motor 2 parameters)		
		1J__	J codes (Application functions)		
		1y__	y codes (Link functions)		
#2	"Data checking"	2-CP	Displays only function codes that have been changed from their factory defaults. You may refer to or change those function codes data.		Section 3.4.2
#3	"Drive monitoring"	3.dAtA	Displays the running information required for maintenance or test running.		Section 3.4.3
#4	"I/O checking"	4. I_O	Displays external interface information.		Section 3.4.4
#5	"Maintenance information"	5.CHAI	Displays maintenance information including accumulated run time.		Section 3.4.5
#6	"Alarm information"	6.AL	Displays the latest four alarm codes. You may refer to the running information at the time when the alarm occurred.		Section 3.4.6
#7	"Data copying" *	7.CPy	Allows you to read or write function code data, as well as verifying it.		--

*To use this function, a remote keypad (option) is required.

Figure 3.3 illustrates the menu transition in Programming mode.

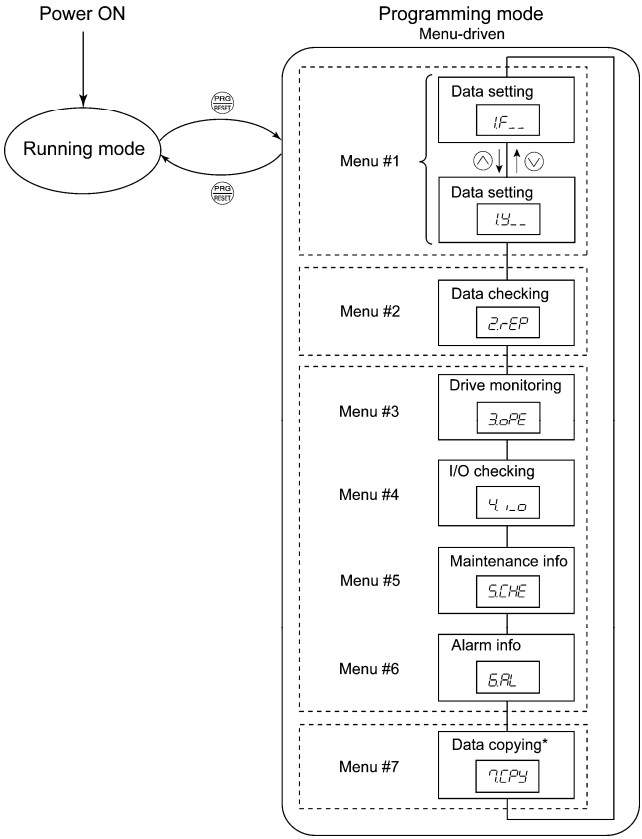

* Displayed only when a remote keypad (option) is set up for use.

Figure 3.3 Menu Transition in Programming Mode

Limiting menus to be displayed

The menu-driven system has a limiter function (specified by function code E52) that limits menus to be displayed for the purpose of simple operation. The factory default is to display Menu #1 "Data setting" only, allowing no switching to any other menu.

Table 3.6 Function Code E52 – Keypad (Mode Selection)

Function code data (E52)	Menus selectable
0: Function code data editing mode	Menu #1 "Data setting" (factory default)
1: Function code data check mode	Menu #2 "Data checking"
2: Full-menu mode	Menu #1 through #6

Note: Menu #7 appears only when the remote keypad (option) is connected.

Tip If the full-menu mode is selected, pressing the ▲ or ▼ key will cycle through the menus. With the FUNC/DATA key, you can select the desired menu item. Once the entire menu has been cycled through, the display will return to the first menu item.

3.4.1 Setting up the function codes – "Data Setting"

Menu #1 "Data setting" in Programming mode allows you to set function codes for making the inverter functions match your needs.

To set function codes in Menu #1 "Data setting," it is necessary to set function code E52 data to "0" (Function code data editing mode) or "2" (Full-menu mode).

The table below lists the function codes available in the FRENIC-Mini. The function codes are displayed on the LED monitor on the keypad as shown below.

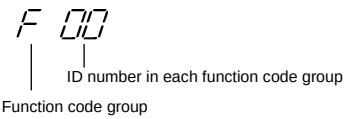

Table 3.7 List of FRENIC-Mini Function Codes

Function code group	Function code	Function	Description
F codes	F00 to F51	Fundamental functions	To be used for basic motor running.
E codes	E01 to E99	Extension terminal functions	To be used to select the functions of the control circuit terminals. To be used to set functions related to the LED monitor display.
C codes	C01 to C99	Control functions of frequency	To be used to set application functions related to frequency settings.
P codes	P02 to P99	Motor 1 parameters	To be used to set special parameters for the motor capacity, etc.
H codes	H03 to H98	High performance functions	To be used for high added value functions and complicated control, etc.
A codes	A01 to A52	Motor 2 parameters	To be used to set specific parameters for the motor capacity, etc.
J codes	J01 to J72	Application functions	To be used for PID control and brake signals.
y codes	y01 to y99	Link functions	To be used for communications

📖 Refer to Chapter 5 "FUNCTION CODES" for details on the function codes.

Figure 3.4 shows the status transition for Menu #1 "Data setting."

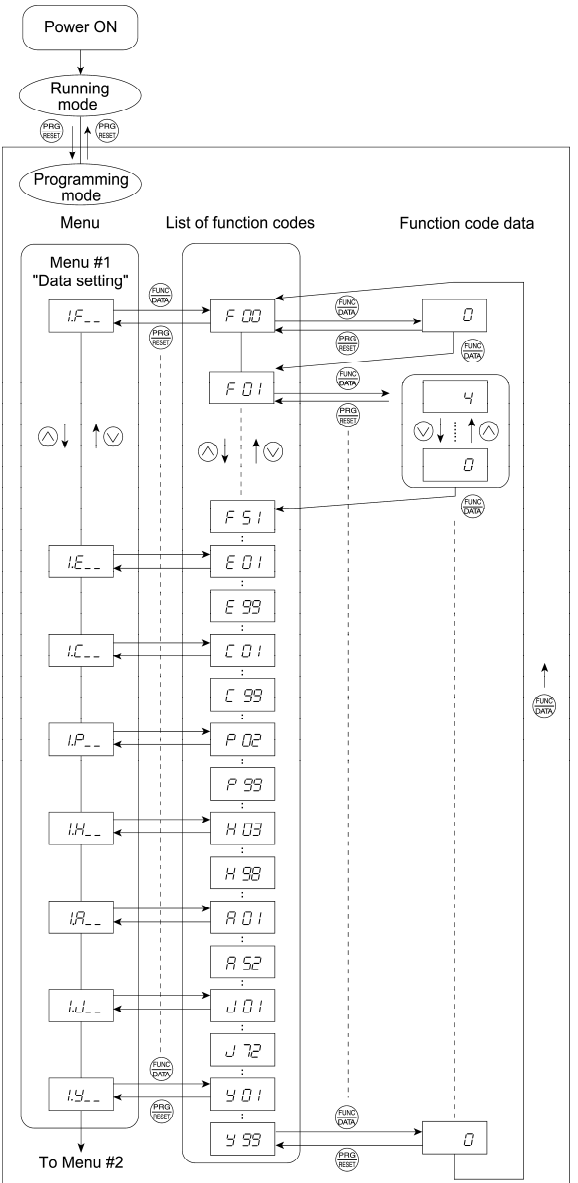

Figure 3.4 "Data Setting" Status Transition

Basic key operation

This section gives a description of the basic key operation, following the example of the function code data changing procedure shown in Figure 3.5.

This example shows you how to change function code F01 data from the factory default "Built-in potentiometer (POT) (F01 = 4)" to "▲ / ▼ keys on the built-in keypad (F01 = 0)."

(1) When the inverter is powered on, it automatically enters Running mode. In that mode, press the PRG/RESET key to switch to Programming mode. The function selection menu appears.

(2) With the menu displayed, use the ▲ and ▼ keys to select the desired function code group. (In this example, select 1/F_ _).

(3) Press the FUNC/DATA key to proceed to the function codes in the function code group selected in (2). (In this example, function code F 00 appears.)

Even if the function code list for a particular function code group is displayed, it is possible to transfer the display to a different function code group using the ▲ and ▼ keys.

(4) Select the desired function code using the ▲ and ▼ keys and press the FUNC/DATA key. (In this example, select function code F 01.)

The data of this function code appears. (In this example, data "4" of F 01 appears.)

(5) Change the function code data using the ▲ and ▼ keys. (In this example, press the ▼ key four times to change data 4 to 0.)

(6) Press the FUNC/DATA key to establish the function code data.

The SAVE appears and the data will be saved in the memory inside the inverter. The display will return to the function code list, then move to the next function code. (In this example, F 02.)

Pressing the PRG/RESET key instead of the FUNC/DATA key cancels the change made to the data. The data reverts to the previous value, the display returns to the function code list, and the original function code reappears.

(7) Press the FUNC/DATA key to return to the menu from the function code list.

Tip

<Cursor movement>

You can move the cursor when changing function code data by holding down the PRG/RESET key for 1 second or longer in the same way as with the frequency settings.

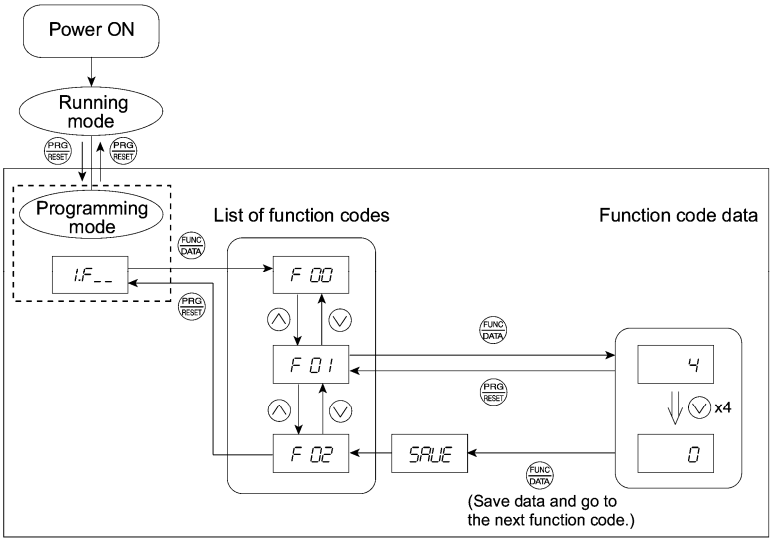

Figure 3.5 Example of Function Code Data Changing Procedure

3.4.2 Checking changed function codes – "Data Checking"

Menu #2 "Data checking" in Programming mode allows you to check function codes that have been changed. Only the function codes whose data has been changed from the factory defaults are displayed on the LED monitor. You may refer to the function code data and change it again if necessary. Figure 3.6 shows the status transition diagram for "Data checking."

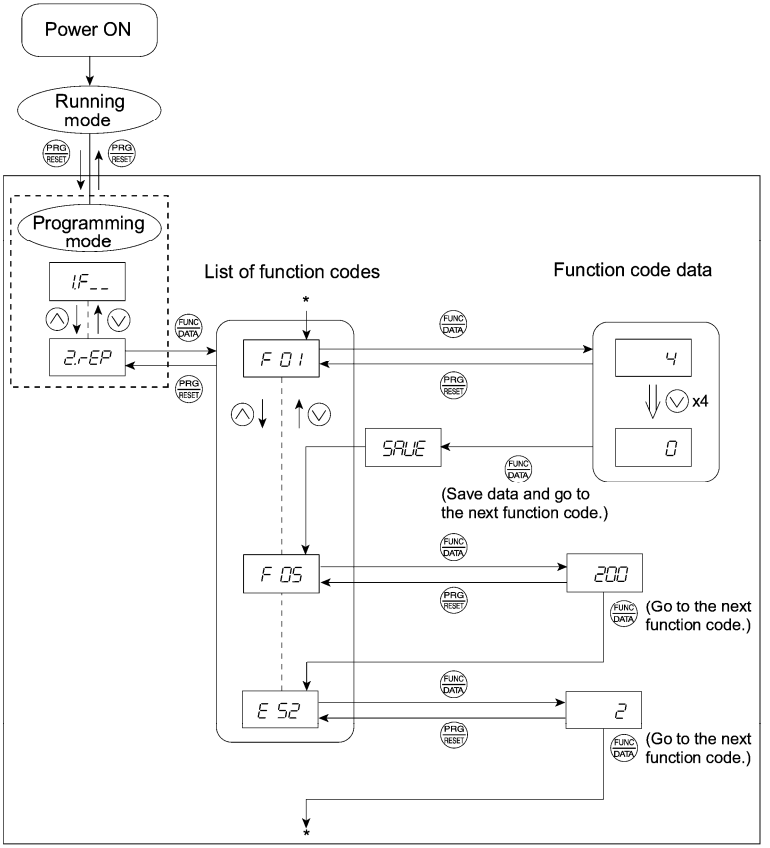

* Pressing the FUNC DATA key with the E 52 data displayed returns to F 01.

Figure 3.6 "Data Checking" Status Transition (When changes are made only to F01, F05, E52)

Basic key operation

The basic key operation is the same as for "Data setting."

Tip To check function codes in Menu #2 "Data checking," it is necessary to set function code E52 to "1" (Function code data check mode) or "2" (Full-menu mode).

For details, refer to "Limiting menus to be displayed" on page 3-9.

3.4.3 Monitoring the running status – "Drive Monitoring"

Menu #3 "Drive monitoring" is used to check the running status during maintenance and test running. The display items for "Drive monitoring" are listed in Table 3.8. Figure 3.7 shows the status transition diagram for "Drive monitoring."

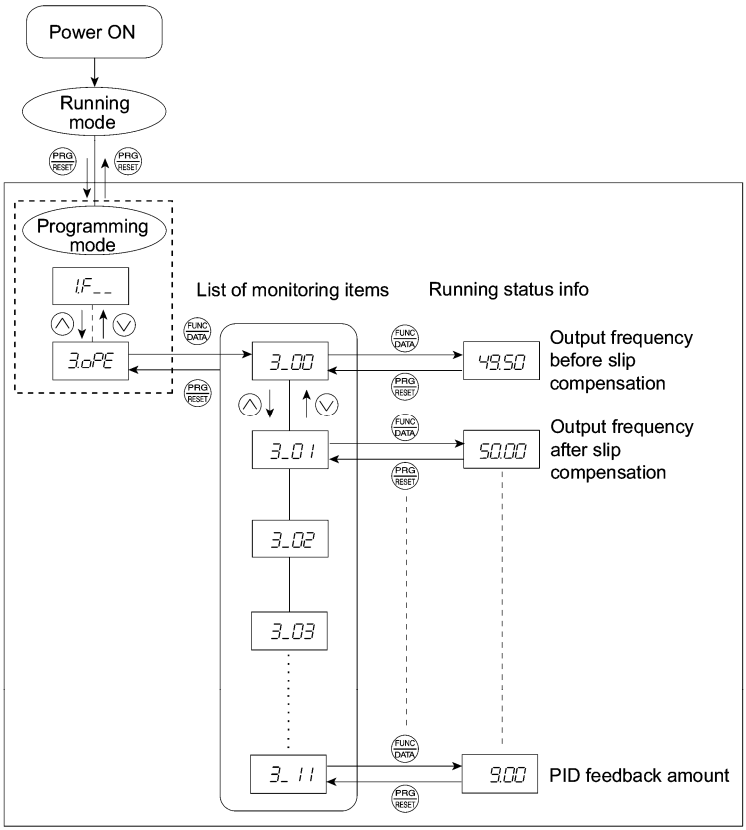

Figure 3.7 "Drive Monitoring" Status Transition

Basic key operation

Before checking the running status on the drive monitor, set function code E52 to "2" (Full-menu mode).

(1) When the inverter is powered on, it automatically enters Running mode. In that mode, press the PRG/RESET key to switch to Programming mode. The function selection menu appears.

(2) With the menu displayed, use the ∧ and ∨ keys to select "Drive monitoring" (3.dPE).

(3) Press the FUNC/DATA key to display the desired code in the monitoring item list (e.g. 3_00).

(4) Use the ∧ and ∨ keys to select the desired monitoring item, then press the FUNC/DATA key.
The running status information for the selected item appears.

(5) Press the PRG/RESET key to return to the monitoring item list. Press the PRG/RESET key again to return to the menu.

Table 3.8 Drive Monitoring Display Items

LED monitor shows:	Contents	Unit	Description
3_00	Output frequency	Hz	Output frequency before slip compensation
3_01	Output frequency	Hz	Output frequency after slip compensation
3_02	Output current	A	Present output current
3_03	Output voltage	V	Present output voltage
3_05	Reference frequency	Hz	Present reference frequency
3_06	Running direction	N/A	Displays the running direction being outputted. F: forward; R: reverse, – – – –: stop
3_07	Running status	N/A	Displays the running status in hex. format. Refer to "**Displaying running status**" on the next page.
3_09	Load shaft speed (line speed)	r/min (m/min)	The unit for load shaft speed is r/min and that for line speed is m/min. Display value = (Output frequency Hz before slip compensation) × (Function code E50) [ ] appears for 10,000 (r/min or m/min) or more. When [ ] is displayed, the data is overflowing, which means that the function code should be reviewed. For example: Load shaft speed = Displayed data × 10 (r/min)
3_10	PID process command	N/A	The command is displayed through the use of function code E40 and E41 data (PID display coefficients A and B). Display value = (PID process command) × (Coefficient A - B) + B If PID control is disabled, "– – – –" appears.
3_11	PID feedback value	N/A	This value is displayed through the use of function code E40 and E41 data (PID display coefficients A and B). Display value = (PID feedback value) × (Coefficient A - B) + B If PID control is disabled, "– – – –" appears.

■ Displaying running status

To display the running status in hexadecimal format, each state has been assigned to bits 0 to 15 as listed in Table 3.9. Table 3.10 shows the relationship between each of the status assignments and the LED monitor display. Table 3.11 gives the conversion table from 4-bit binary to hexadecimal.

Table 3.9 Running Status Bit Allocation

Bit	Notation	Content	Bit	Notation	Content
15	BUSY	"1" when function code data is being written.	7	VL	"1" under voltage limiting control.
14	WR	Always "0."	6	TL	Always "0."
13		Always "0."	5	NUV	"1" when the DC link bus voltage is higher than the undervoltage level.
12	RL	"1" when communication is enabled (when ready for run and frequency commands via communications link).	4	BRK	Always "0."
11	ALM	"1" when an alarm has occurred.	3	INT	"1" when the inverter output is shut down.
10	DEC	"1" during deceleration.	2	EXT	"1" during DC braking.
9	ACC	"1" during acceleration.	1	REV	"1" during running in the reverse direction.
8	IL	"1" under current limiting control.	0	FWD	"1" during running in the forward direction.

Table 3.10 Running Status Display

LED No.		LED4				LED3				LED2				LED1			
Bit		15	14	13	12	11	10	9	8	7	6	5	4	3	2	1	0
Notation		BUSY	WR		RL	ALM	DEC	ACC	IL	VL	TL	NUV	BRK	INT	EXT	REV	FWD
Example	Binary	1	0	0	0	0	0	1	1	0	0	1	0	0	0	0	1
	Hexadecimal (See Table 3.11.)	8				3				2				1			
	Hexadecimal on the LED monitor	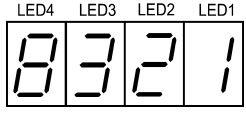															

Hexadecimal expression

A 4-bit binary number can be expressed in hexadecimal format (1 hexadecimal digit). Table 3.11 shows the correspondence between the two notations. The hexadecimals are shown as they appear on the LED monitor.

Table 3.11 Binary and Hexadecimal Conversion

Binary				Hexadecimal	Binary				Hexadecimal
Eight's place	Four's place	Two's place	One's place		Eight's place	Four's place	Two's place	One's place	
0	0	0	0	0	1	0	0	0	8
0	0	0	1	1	1	0	0	1	9
0	0	1	0	2	1	0	1	0	A
0	0	1	1	3	1	0	1	1	b
0	1	0	0	4	1	1	0	0	C
0	1	0	1	5	1	1	0	1	d
0	1	1	0	6	1	1	1	0	E
0	1	1	1	7	1	1	1	1	F

3.4.4 Checking I/O signal status – "I/O Checking"

With Menu #4 "I/O checking," you can display the I/O status of external signals without using a measuring instrument. External signals that can be displayed include digital I/O signals and analog I/O signals. Table 3.12 lists check items available. The status transition for I/O checking is shown in Figure 3.8.

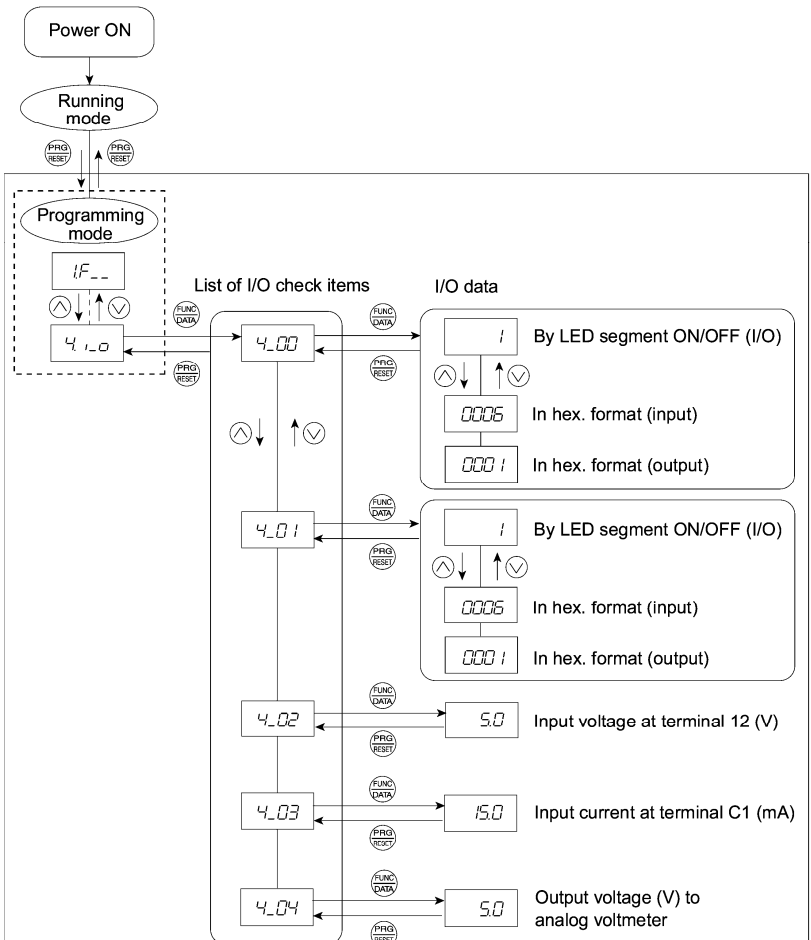

Figure 3.8 "I/O Checking" Status Transition

Basic key operation

Before checking the status of the I/O signals, set function code E52 to "2" (Full-menu mode).

(1) When the inverter is powered on, it automatically enters Running mode. In that mode, press the PRG/RESET key to switch to Programming mode. The function selection menu appears.

(2) With the menu displayed, use the ▲ and ▼ keys to select "I/O check" (4. I/O).

(3) Press the FUNC/DATA key to display the codes for the I/O check item list. (e.g. 4.00)

(4) Use the ▲ and ▼ keys to select the desired I/O check item, then press the FUNC/DATA key.

The corresponding I/O check data appears. For control I/O signal terminal and control circuit terminal input under communication control, use the ▲ and ▼ keys to select one of the two different display methods.

(5) Press the PRG/RESET key to return to the I/O check item list. Press the PRG/RESET key again to return to the menu.

Table 3.12 I/O Check Items

LED monitor shows:	Contents	Description
4.00	I/O signals on the control circuit terminals	Shows the ON/OFF state of the digital I/O terminals. Refer to "**Displaying control I/O signal terminals**" below for details on the display contents.
4.01	I/O signals on the control circuit terminals under communication control	Shows the ON/OFF state for the digital I/O terminals that received a command via RS-485 communications. Refer to "**Displaying control I/O signal terminals**" and "**Displaying control I/O signal terminals under communication control**" below for details of the item displayed.
4.02	Input voltage on terminal [12]	Shows the input voltage on terminal [12] in volts (V).
4.03	Input current on terminal [C1]	Shows the input current on terminal [C1] in milliamperes (mA).
4.04	Output voltage to analog meters [FMA]	Shows the output voltage on terminal [FMA] in volts (V).

Displaying control I/O signal terminals

The status of control I/O signal terminals may be displayed with ON/OFF of the LED segment or in hexadecimal display.

■ Display I/O signal status with ON/OFF of the LED segment

As shown in Table 3.13 and the figure below, each of the segments "a" to "e" on LED1 lights when the corresponding digital input terminal ([FWD], [REV], [X1], [X2], or [X3]) is short-circuited with terminal [CM] or [PLC]*, and does not light when it is open. Segment "a" on LED3 lights when the circuit between output terminals [Y1] and [Y1E] is closed and does not light when the circuit is open. Segment "a" on LED4 is for terminal [30ABC]. Segment "a" on LED4 lights when the circuit between terminals [30C] and [30A] is short-circuited (ON) and does not light when it is open.

* Terminal [CM] if the jumper switch is set for SINK; terminal [PLC] if the jumper switch is set for SOURCE.

Tip
- If all terminal input signals are OFF (open), segment "g" on all of LEDs 1 to 4 will light ("– – – –").
- Refer to Chapter 5 "FUNCTION CODES" for details.

Table 3.13 Segment Display for External Signal Information

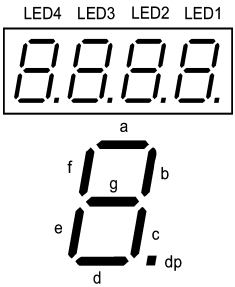

Segment	LED4	LED3	LED2	LED1
a	30ABC	Y1-Y1E	—	FWD-CM or FWD-PLC *2
b	—	—	—	REV-CM or REV-PLC *2
c	—	—	—	X1-CM or X1-PLC *2
d	—	—	—	X2-CM or X2-PLC *2
e	—	—	—	X3-CM or X3-PLC *2
f	—	—	(XF) *1	—
g	—	—	(XR) *1	—
dp	—	—	(RST) *1	—

—: No corresponding control circuit terminal exists.

*1 (XF), (XR), and (RST) are assigned for communication. Refer to "**Displaying control I/O signal terminals under communication control**" on the next page.

*2 Terminal [CM] if the jumper switch is set for SINK; terminal [PLC] if the jumper switch is set for SOURCE.

■ Displaying I/O signal status in hexadecimal format

Each I/O terminal is assigned to bit 15 through bit 0 as shown in Table 3.14 An unassigned bit is interpreted as "0." Allocated bit data is displayed on the LED monitor in 4 hexadecimal digits ("0" to "F" each).

With the FRENIC-Mini, digital input terminals [FWD] and [REV] are assigned to bit 0 and bit 1, respectively. Terminals [X1] through [X3] are assigned to bits 2 through 4. The bit is set to "1" when the corresponding input terminal is short-circuited with terminal [CM] or terminal [PLC] *, and is set to "0" when it is open. For example, when [FWD] and [X1] are on (short-circuited) and all the others are off (open), "0005" is displayed on LED4 to LED1.

* Terminal [CM] if the jumper switch is set for SINK; terminal [PLC] if the jumper switch is set for SOURCE.

Digital output terminal [Y1] is assigned to bit 0. Bit 0 is set to "1" when this terminal is short-circuited with [Y1E], and to "0" when it is open. The status of the relay contact output terminal [30ABC] is assigned to bit 8. It is set to "1" when the circuit between output terminals [30A] and [30C] is closed and to "0" when the circuit between [30B] and [30C] is closed. For example, if [Y1] is on and [30A] is connected to [30C], then "0 10 1" is displayed on the LED4 to LED1.

Table 3.14 presents an example of bit assignment and corresponding hexadecimal display on the 7-segment LED.

Table 3.14 Segment Display for I/O Signal Status in Hexadecimal Format

LED No.		LED4				LED3				LED2				LED1			
Bit		15	14	13	12	11	10	9	8	7	6	5	4	3	2	1	0
Input terminal		(RST)*	(XR)*	(XF)*	-	-	-	-	-	-	-	-	X3	X2	X1	REV	FWD
Output terminal		-	-	-	-	-	-	-	30AC	-	-	-	-	-	-	-	Y1
Example	Binary	0	0	0	0	0	0	0	0	0	0	0	0	0	1	0	1
	Hexa-decimal (See Table 3.11.)	0				0				0				5			
	Hexa-decimal on the LED monitor	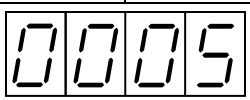															

– : No corresponding control terminal exists.

* (XF), (XR), and (RST) are assigned for communication. Refer to "**Displaying control I/O signal terminals under communication control**."

Displaying control I/O signal terminals under communication control

During control via communication, input commands sent through the RS-485 communications link can be displayed in two ways: "display with ON/OFF of the LED segment" and "in hexadecimal format." The content to be displayed is basically the same as that for the control I/O signal terminal status display; however, (XF), (XR), and (RST) are added as inputs. Note that under communications control, I/O display is in normal logic (using the original signals that are not inverted).

📖 Refer to the RS-485 Communication User's Manual (MEH448) for details on input commands sent through the RS-485 communications link.

3.4.5 Reading maintenance information – "Maintenance Information"

Menu #5 "Maintenance information" in Programming mode contains information necessary for performing maintenance on the inverter. Table 3.15 lists the maintenance information display items and Figure 3.9 shows the status transition for maintenance information.

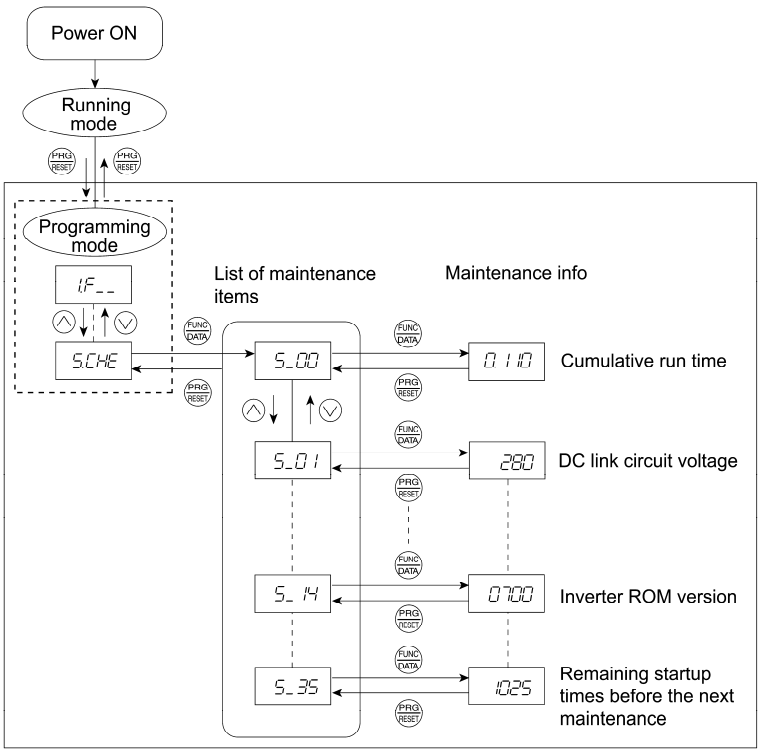

Figure 3.9 "Maintenance Information" Status Transition

Basic key operation

Before viewing maintenance information, set function code E52 to "2" (Full-menu mode).

(1) When the inverter is powered on, it automatically enters Running mode. In that mode, press the PRG key to switch to Programming mode. The function selection menu appears.

(2) With the menu displayed, use the ▲ and ▼ keys to select "Maintenance information" (5.CHE).

(3) Press the FUNC key to display the list of maintenance item codes (e.g. 5_00).

(4) Use the ▲ and ▼ keys to select the desired maintenance item, then press the FUNC key. The data of the corresponding maintenance item appears.

(5) Press the PRG key to return to the list of maintenance items. Press the PRG key again to return to the menu.

Table 3.15 Maintenance Display Items

LED Monitor shows:	Contents	Description
5_00	Cumulative run time	Shows the cumulative power-ON time of the inverter. Unit: 1,000 hours. When the total ON-time is less than 10,000 hours (display: 0.001 to 9.999), data is shown in units of one hour. When the total time is 10,000 hours or more (display: 10.00 to 65.53), it is shown in units of 10 hours. When the total time exceeds 65535 hours, the display will be reset to "0" and the count will start again.
5_01	DC link bus voltage	Shows the DC link bus voltage of the inverter. Unit: V (volts)
5_03	Max. temperature of heat sink	Shows the maximum temperature of the heat sink for every hour. Unit: ºC
5_04	Max. effective current	Shows the maximum effective current for every hour. Unit: A (amperes)
5_05	Capacitance of the DC link bus capacitor	Shows the current capacitance of the DC link bus capacitor, based on the capacitance when shipping as 100%. Refer to Chapter 7 "MAINTENANCE AND INSPECTION" for details. Unit: %
5_06	Cumulative run time of electrolytic capacitors on the printed circuit boards	Shows the cumulative time during which a voltage is applied to the electrolytic capacitors on the printed circuit boards. Unit: 1,000 hours (Display range: 0.01 to 99.99) When the count is less than 99,990 hours (Display: 0.01 to 99.99), it is possible to check data in units of 10 hours (0.01). When the count exceeds 99,990 hours, it stops and the LED monitor sticks to 99.99.
5_07	Cumulative run time of the cooling fan	Shows the cumulative run time of the cooling fan. If the cooling fan ON/OFF control (function code H06) is enabled, the time when the fan is stopped is not counted. Unit: 1,000 hours (Display range: 0.01 to 99.99) When the count is less than 99,990 hours (Display: 0.01 to 99.99), it is possible to check data in units of 10 hours (0.01). When the count exceeds 99,990 hours, it stops and the LED monitor sticks to 99.99.
5_08	Number of startups	Shows the cumulative count of times the inverter is started up (i.e., the number of run commands issued). 1.000 indicates 1,000 times. When any number ranging from 0.001 to 9.999 is displayed, the count increases by 0.001 per startup, and when any number from 10.00 to 65.53 is displayed, the count increases by 0.01 every 10 startups. If the count exceeds 65,535, it will be reset to "0" and start over again.
5_09	Input watt-hour	Shows the input watt-hour of the inverter. Unit: 100 kWh (Display range: 0.001 to 9999) Depending on the value of input watt-hour, the decimal point on the LED monitor shifts to show it within the LED monitors' resolution (Display resolution: 0.001 → 0.01 → 0.1 → 1). To reset the integrated input watt-hour and its data, set function code E51 to "0.000." When the count exceeds 1,000,000 kWh, it will be reset to "0."

Table 3.15 Maintenance Display Items (Continued)

LED Monitor shows:	Contents	Description
5_10	Input watt-hour data	Shows the value expressed by "input watt-hour (kWh) × E51 (whose data range is 0.000 to 9,999)." Unit: None. (Display range: 0.001 to 9999. The count cannot exceed 9999. It will be fixed at 9,999 once the calculated value exceeds 9999.) Depending on the value of integrated input watt-hour data, the decimal point on the LED monitor shifts to show it within the LED monitors' resolution. To reset the integrated input watt-hour data, set function code E51 to "0.000."
5_11	No. of RS-485 errors	Shows the total number of errors that have occurred in RS-485 communication after the power is turned ON. Once the count exceeds 9.999, it will be reset to "0."
5_12	RS-485 error contents	Shows the latest error that has occurred in RS-485 communication in decimal format. For error contents, refer to the RS-485 Communication User's Manual (MEH448).
5_14	Inverter's ROM version	Shows the inverter's ROM version as a 4-digit code.
5_16	Keypad's ROM version	Shows the keypad's ROM version as a 4-digit code. (Available only when an optional remote keypad is connected.)
5_23	Cumulative run time of motor	Shows the content of the cumulative run time of the motor. The display method is the same as for "Cumulative run time" (5_00).
5_31	Remaining time before the next motor 1 maintenance	Shows the time remaining before the next maintenance, which is estimated by subtracting the cumulative run time of motor 1 from the maintenance interval specified by H78. (This function applies to motor 1 only.) Display range: 0 to 9999 The x10 LED turns ON. Time remaining before the next maintenance (hour) = Displayed value × 10 Available in the ROM version 0500 or later.
5_35	Remaining startup times before the next maintenance	Shows the startup times remaining before the next maintenance, which is estimated by subtracting the number of startups from the preset startup count for maintenance specified by H79. (This function applies to motor 1 only.) The display method is the same as for 5_08 above. Available in the ROM version 0500 or later.

3.4.6 Reading alarm information – "Alarm Information"

Menu #6 "Alarm information" in Programming mode shows the causes of the past 4 alarms as an alarm code. Further, it is also possible to display alarm information that indicates the status of the inverter when the alarm condition occurred. Figure 3.10 shows the status transition of the alarm information and Table 3.16 lists the details of the alarm information.

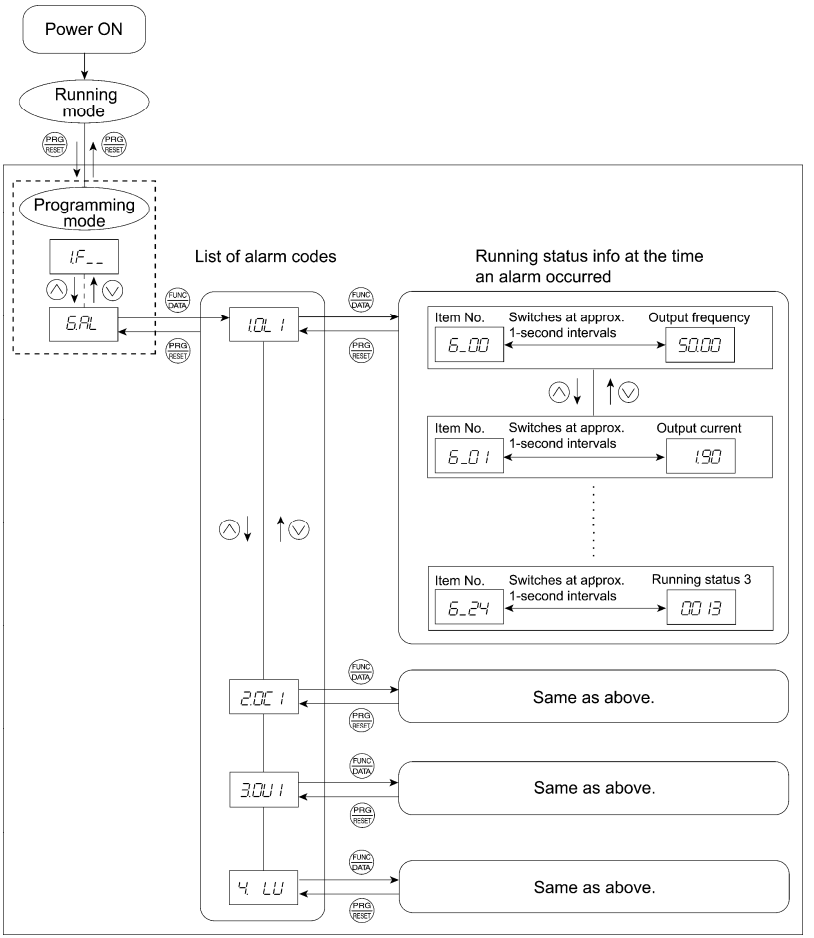

Figure 3.10 "Alarm Information" Status Transition

Basic key operation

Before viewing alarm information, set function code E52 to "2" (Full-menu mode).

(1) When the inverter is powered on, it automatically enters Running mode. In that mode, press the PRG/RESET key to switch to Programming mode. The function selection menu appears.

(2) With the menu displayed, use the ∧ and ∨ keys to select "Alarm information" (6.ALM).

(3) Press the FUNC/DATA key to display the alarm list code (e.g. 1.OL 1).

In the list of alarm codes, the alarm information for the last 4 alarms is saved as an alarm history.

(4) Each time the ∧ or ∨ key is pressed, the last 4 alarms are displayed in order from the most recent one as 1., 2., 3., and 4..

(5) While the alarm code is displayed, press the FUNC/DATA key to have the corresponding alarm item number (e.g. 6_00) and data (e.g. Output frequency) displayed alternately in intervals of approximately 1 second. You can also have the item number (e.g. 6_01) and data (e.g. Output current) for any other item displayed using the ∧ and ∨ keys.

(6) Press the PRG/RESET key to return to the alarm list. Press the PRG/RESET key again to return to the menu.

Table 3.16 Alarm Information Displayed

LED monitor shows: (item No.)	Contents	Description
6_00	Output frequency	Output frequency before slip compensation
6_01	Output current	Present output current
6_02	Output voltage	Present output voltage
6_03	Calculated torque	Calculated motor output torque
6_04	Reference frequency	Present reference frequency
6_05	Rotational direction	This shows the running direction being output. F: forward; r: reverse; ----: stop
6_06	Running status	This shows the running status in hexadecimal. Refer to **Displaying running status** in Section 3.4.3 "Monitoring the running status."
6_07	Cumulative run time	Shows the cumulative power-ON time of the inverter. Unit: thousands of hours. When the total ON-time is less than 10000 hours (display: 0.001 to 9.999), data is shown in units of one hour. When the total time is 10000 hours or more (display: 10.00 to 65.53), it is shown in units of 10 hours. When the total time exceeds 65535 hours, the display will be reset to "0" and the count will start again.
6_08	No. of startups	The cumulative total number of times an inverter run command has been issued is calculated and displayed. 1.000 indicates 1000 times. When any number ranging from 0.001 to 9.999 is displayed, the display increases by 0.001 per startup, and when any number from 10.00 to 65.53 is displayed, the display increases by 0.01 every 10 startups. When the total number exceeds 65535, the counter will be reset to "0" and start over again.
6_09	DC link bus voltage	Shows the DC link bus voltage of the inverter's main circuit. Unit: V (volts)

Table 3.16 Alarm Information Displayed (Continued)

LED monitor shows: (item No.)	Contents	Description
6_11	Max. temperature of heat sink	Shows the temperature of the heat sink. Unit: ºC
6_12	Terminal I/O signal status (displayed with the ON/OFF of LED segments)	Shows the ON/OFF status of the digital I/O terminals. Refer to "**Displaying control I/O signal terminals**" in Section 3.4.4 "Checking I/O signal status" for details.
6_13	Signal input terminal status (in hexadecimal format)	
6_14	Terminal output signal status (in hexadecimal format)	
6_15	No. of consecutive occurrences	This is the number of times the same alarm occurs consecutively.
6_16	Overlapping alarm 1	Simultaneously occurring alarm codes (1) (- - - is displayed if no alarms have occurred.)
6_17	Overlapping alarm 2	Simultaneously occurring alarm codes (2) (- - - is displayed if no alarms have occurred.)
6_18	Terminal I/O signal status under communication control (displayed with the ON/OFF of LED segments)	Shows the ON/OFF status of the digital I/O terminals under RS-485 communication control. Refer to "**Displaying control I/O signal terminals under communication control**" in Section 3.4.4 "Checking I/O signal status" for details.
6_19	Terminal input signal status under communication control (in hexadecimal format)	
6_20	Terminal output signal status under communication control (in hexadecimal format)	
6_21	Error sub code	Secondary error code for the alarm.
6_22	Running status 2	Shows the running status 2 in hexadecimal format. For details, see the next page.
6_24	Running status 3	Shows the running status 3 in hexadecimal format. For details, see the next page.

Note When the same alarm occurs repeatedly in succession, the alarm information for the first occurrence is retained and the information for the subsequent occurrences is discarded. Only the number of consecutive occurrences will be updated.

Table 3.17 Running Status 2 (d022) Bit Assignment

Bit	Content	Bit	Content
15	Drive motor type 0: Induction motor, 1: Permanent magnet synchronous motor (PMSM)	7	(Not used.)
14	(Not used.)	6	
13		5	Motor selection 00: Motor 1 01: Motor 2
12		4	
11		3	Inverter drive control 0000: V/f control with slip compensation inactive 0001: Dynamic torque vector control 0010: V/f control with slip compensation active
10		2	
9		1	
8	Rotation direction limitation 0: Enable, 1: Disable	0	

Table 3.18 Running Status 3 (d024) Bit Assignment

Bit	Notation	Content	Bit	Notation	Content
15	-	(Not used.)	7	-	(Not used.)
14	ID2	Current detected 2	6	-	(Not used.)
13	IDL	Low current detected	5	OL	Motor overload early warning
12	ID	Current detected	4	IPF	Auto-restarting after momentary power failure
11	OLP	Overload prevention control	3	SWM2	Motor 2 selected
10	LIFE	Lifetime alarm	2	-	(Not used.)
9	OH	Heat sink overheat early warning	1	FDT	Frequency detected
8	TRY	Auto-resetting	0	FAR	Frequency arrival signal

3.5 Alarm mode

When an abnormal condition occurs, the protective function is invoked to issue an alarm, and the inverter automatically switches to Alarm mode and displays the corresponding alarm code on the LED monitor.

■ Releasing the Alarm and Transferring the Inverter to Running Mode

Remove the cause of the alarm and press the PRG/RESET key to release the alarm and return to Running mode. The alarm can be removed using the PRG/RESET key only when the current alarm code is displayed.

■ Displaying the Alarm History

It is possible to display the most recent 3 alarm codes in addition to the one currently displayed. Previous alarm codes can be displayed by pressing the ∧ or ∨ key while the current alarm code is displayed.

■ Displaying the Status of Inverter at the Time of Alarm

If an alarm occurs, you can check various running status information (output frequency, output current, etc.) by pressing the FUNC/DATA key when the alarm code is displayed. The item number and data for each running information is displayed in alternation.

Further, you can view various pieces of information on the status of the inverter using the ∧ or ∨ key. The information displayed is the same as for Menu #6 "Alarm information" in Programming mode. Refer to Table 3.16 in Section 3.4.6 "Reading alarm information."

Pressing the PRG/RESET key while the status information is displayed returns the display to the alarm codes.

Note When the status information is displayed after removal of the alarm cause, pressing the PRG/RESET key twice switches to the display of the alarm code and then releases the inverter from the alarm state. If a run command has been received by this time, be careful since the motor will start running.

■ Transit to Programming Mode

You can also go back to Programming mode by pressing the STOP + PRG/RESET keys simultaneously while the alarm is displayed, and modify the setting of function codes.

Figure 3.11 summarizes the possible transitions between different menu items.

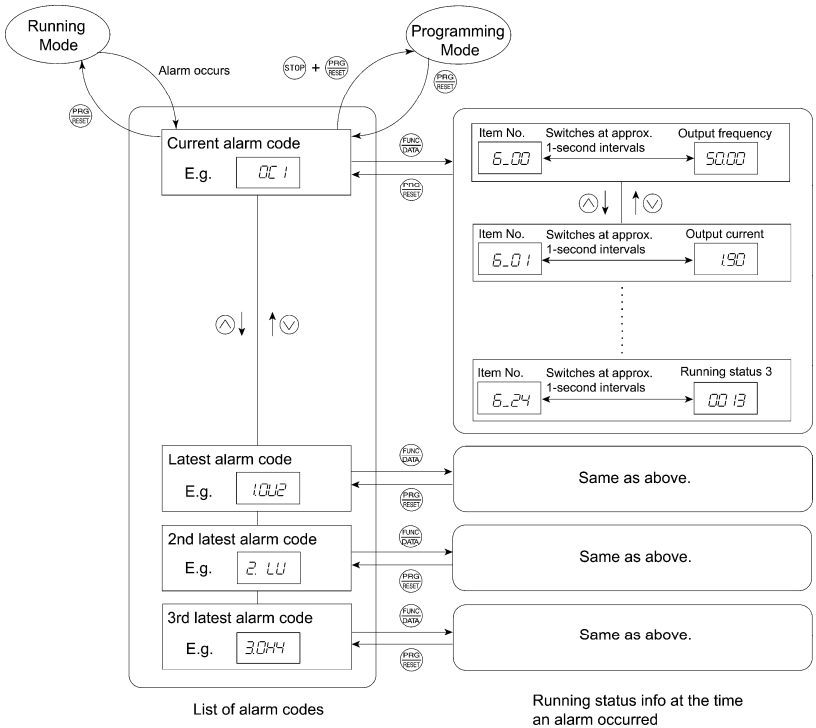

Figure 3.11 Alarm Mode Status Transition

Chapter 4 RUNNING THE MOTOR

4.1 Test Run

4.1.1 Checking prior to powering on

Check the following prior to powering on the inverter.

(1) Check the wiring to the power input terminals (L1/R, L2/S and L3/T or L1/L and L2/N) and inverter output terminals (U, V and W). Also check that the grounding wires are connected to the grounding terminals correctly. See Figure 4.1.

⚠ WARNING ⚠

- Do not connect power supply wires to the inverter output terminals U, V, and W. Otherwise, the inverter may be broken if you turn the power ON.
- Be sure to connect the grounding wires of the inverter and the motor to the ground electrodes.

Otherwise, electric shock may occur.

(2) Check the control circuit terminals and main circuit terminals for short circuits or ground faults.

(3) Check for loose terminals, connectors and screws.

(4) Check that the motor is separated from mechanical equipment.

(5) Make sure that all switches of devices connected to the inverter are turned OFF. (Powering on the inverter with any of those switches being ON may cause an unexpected motor operation.)

(6) Check that safety measures are taken against runaway of the equipment, e.g., a defense to prevent people from access to the equipment.

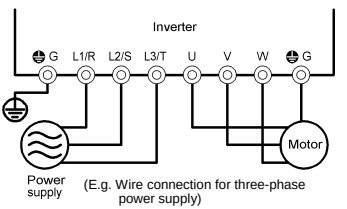

Figure 4.1 Connection of Main Circuit Terminals

4.1.2 Powering ON and checking

⚠ WARNING ⚠

- Be sure to mount the terminal block covers before turning the power ON. Do not remove any cover while powering on.
- Do not operate switches with wet hands.

Otherwise electric shock could occur.

Turn the power ON and check the following points. This is a case when no function code data is changed from the factory defaults.

(1) Check that the LED monitor displays 0.00 (indicating that the frequency command is 0 Hz) that is blinking. (See Figure 4.2.)

If the LED monitor displays any number except 0.00, use the potentiometer to set 0.00.

(2) Check that the built-in cooling fan rotates.

(Inverters of FEN0010C2S-2□/7□, FRN0005C2S-4□ or below are not equipped with a cooling fan.)

Figure 4.2 Display of the LED Monitor after Power-on

4.1.3 Preparation before a test run--Configuring function code data

Before running the motor, configure function code data specified in Table 4.1 in accordance with the motor ratings and your system design values. The motor ratings are printed on the nameplate of the motor. For your system design values, ask system designers about them.

- For details about how to change function code data, refer to Chapter 3, Section 3.4.1 "Setting the function codes – "Data Setting." Refer to the function code H03 in Chapter 5 "FUNCTION CODES" for the factory defaults of motor parameters. If any of them is different from the default setting, change the function code data.
- When using a PMSM, refer to Chapter 5, Section 5.3 "Notes in Driving PMSM."

Table 4.1 Settings of Function Code Data before a Test Run

Function code	Name	Function code data	Factory setting			
			Asia (A)	China (C)	EU (E)	USA (U)
F04(A02)	Base frequency	Motor ratings (printed on the nameplate of the motor)	60.0 (Hz)	50.0 (Hz)		60.0 (Hz)
F05(A03)	Rated voltage at base frequency		0 (V)			230 (V)
			0 (V)			460 (V)
P02(A16)	Motor parameter (Rated capacity)		Applicable motor rated capacity			
P03(A17)	Motor parameter (Rated current)		Rated current of applicable motor			
P99(A39)	Motor selection		0: Motor characteristics 0 (Fuji standard 8-series motors)			1: Motor characteristics 1 (HP rating motors)
F03(A01)	Maximum frequency	System design values * For a test-driving of the motor, increase values so that they are longer than your system design values. If the set time is short, the inverter may not start running the motor.	60.0 (Hz)		50.0 (Hz)	60.0 (Hz)
F07	Acceleration time 1*		6.00 (s)			
F08	Deceleration time 1*		6.00 (s)			

Tip In any of the following cases, the default settings may not produce the best results for auto torque boost, auto energy saving, automatic deceleration, auto search for idling motor speed, slip compensation, or torque vector, since the standard settings of motor parameters for Fuji motors are not applicable. Tune the motor parameters according to the procedure given below.

- The motor to be driven is not a Fuji product or is a non-standard product.
- The cabling between the motor and the inverter is long.
- A reactor is inserted between the motor and the inverter.

A codes are used to specify the data for motor 2. Use them if necessary.

< Tuning procedure >

1) Preparation

Check the rating plate on the motor and set the following function codes to their nominal ratings:

- F04 and A02: Base frequency
- F05 and A03: Rated voltage at base frequency
- P02 and A16: Motor rated capacity
- P03 and A17: Motor rated current

2) Selection of tuning process

Check the situation of the machine system and select either "Tuning while the motor is stopped (P04 or A18 = 1)" or "Tuning while the motor is running (P04 or A18 = 2)." In the case of "Tuning while the motor is running (P04 or A18 = 2)," also adjust the acceleration and deceleration times (F07 and F08) and set the rotation direction properly so that it matches the actual rotation direction of the machine system.

Data for P04, A18	Motor parameters subjected to tuning:	Tuning type	Selection condition of tuning type
1	Primary resistance (%R1) (P07, A21) Leakage reactance (%X) (P08, A22)	Tuning the %R1 and %X, with the motor being stopped.	The motor cannot be rotated or 50% or more of the rated load would be applied to the motor if rotated.
2	Primary resistance (%R1) (P07, A21) Leakage reactance (%X) (P08, A22) No-load current (P06, A20) Rated slip frequency (P12, A26)	Tuning the %R1 and %X, with the motor being stopped. Tuning the no-load current, with the motor running at 50% of the base frequency.	Even if the motor is rotated, it is safe and no more than 50% of the rated load would be applied to the motor if rotated. (Tuning with no load will obtain the highest precision.)

Upon completion of the tuning, each motor parameter will be automatically saved into the applicable function code.

3) Preparation of machine system

Perform appropriate preparations on the motor and its load, such as disengaging the coupling and deactivating the safety device.

Switch to the motor 1 or motor 2, which the tuning is to be performed on.

Tuning results by P04 will be applied to P codes for the motor 1, and tuning results by A18 will be applied to A codes for the motor 2.

Note Assigning the ***SWM2*** signal ("Switch to motor 2") to terminal [Y1] or [30A/B/C] automatically switches the output status of ***SWM2*** depending on the motor selected for tuning.

4) Perform tuning

① Set function code P04 or A18 to "1" or "2" and press the FUNC DATA key. (The blinking of / or on the LED monitor slows down.)

② Enter a run command for the rotation direction selected. The factory default is "RUN key on the keypad for forward rotation." To switch to reverse rotation, change the data of

function code F02.

③ The display of 𝐼 or 𝐶 stays lit, and tuning starts with the motor stopped.
(Maximum tuning time: Approx. 40 s.)

④ If P04 or A18 = 2, the motor is accelerated to approximately 50% of the base frequency and then tuning starts. Upon completion of measurements, the motor decelerates to a stop.
(Estimated tuning time: Acceleration time + 20 s + Deceleration time)

⑤ Tuning continues with the motor stopped.
(Maximum tuning time: Approx. 10 s.)

⑥ If the terminal signal ***FWD*** or ***REV*** is selected as a run command (F02 = 1), 𝐸𝑛𝑑 appears upon completion of the measurements.

⑦ The run command is turned OFF. (The run command given through the keypad or the communications link is automatically turned OFF).
The tuning completes and the next function code 𝑃05 or 𝐴20 appears on the keypad.

■ Tuning errors

Improper tuning would negatively affect the operation performance and, in the worst case, could even cause hunting or deteriorate precision. Therefore, if the inverter finds any abnormality in the tuning results or any error in the tuning process, it displays 𝐸𝑟-7 and discards the tuning data.

Listed below are possible causes that trigger tuning errors.

Possible tuning error causes	Details
Error in tuning results	- An interphase voltage unbalance has been detected. - Tuning has resulted in an abnormally high or low value of a parameter.
Output current error	An abnormally high current has flown during tuning.
Sequence error	During tuning, a run command has been turned OFF, or ***BX*** ("Coast to a stop") or other similar terminal command has been received.
Error due to limitation	- During tuning, any of the operation limiters has been activated. - The maximum frequency or the frequency limiter (high) has limited tuning operation.
Other errors	An undervoltage or any other alarm has occurred.

If any of these errors has occurred, remove the error cause and perform tuning again, or consult your Fuji Electric representative.

Note If a filter other than the optional Fuji output filter (OFL-□□□-4A) is connected to the inverter's output (secondary) circuit, the tuning result cannot be assured. When replacing the inverter connected with such a filter, make a note of the old inverter's settings for the primary resistance %R1, leakage reactance %X, no-load current, and rated slip frequency, and specify those values to the new inverter's function codes.

4.1.4 Test run

⚠WARNING

If the user configures the function codes wrongly without completely understanding this Instruction Manual and the FRENIC-Mini User's Manual, the motor may rotate with a torque or at a speed not permitted for the machine.

Accident or injury may result.

Follow the descriptions given in Section 4.1.1 "Checking prior to powering on" to Section 4.1.3 "Preparation before a test," then begin the test run of the motor.

⚠CAUTION

If any abnormality is found in the inverter or motor, immediately stop operation and investigate the cause referring to Chapter 6 "TROUBLESHOOTING."

---------- **Test Run Procedure** ----------

(1) Turn the power ON and check that the reference frequency 0.00 Hz is blinking on the LED monitor.

(2) Set a low reference frequency such as 5 Hz, using ⏶ / ⏷ keys. (Check that the frequency is blinking on the LED monitor.)

(3) Press the RUN key to start running the motor in the forward direction. (Check that the reference frequency is displayed on the LED monitor.)

(4) To stop the motor, press the STOP key.

< Check points during a test run >

- Check that the motor is running in the forward direction.
- Check for smooth rotation without motor humming or excessive vibration.
- Check for smooth acceleration and deceleration.

When no abnormality is found, press the RUN key again to start driving the motor, then increase the reference frequency using ⏶ / ⏷ keys. Check the above points again.

If any problem is found, modify the function code data again as described below.

4.2 Operation

After confirming that the inverter normally drives the motor in a test run, make mechanical connections (connections to the machine system) and electrical connections (wiring and cabling), and configure the necessary function codes properly before starting a production run.

Note Depending on the production run conditions, further adjustments may be required, such as adjustments of torque boost (F09, A05), acceleration time (F07, E10), and deceleration time (F08, E11).

4.2.1 Jogging Operation

This section provides the procedure for jogging the motor.

① Making the inverter ready to jog with the steps below (The LED monitor should display JOG.)

- Switch the inverter to Running mode (see page 3-3).
- Press the "STOP + ∧ keys" simultaneously. The LED monitor displays the jogging frequency for approximately one second and then returns to JOG again.

Tip

- Function codes C20 and H54 specify the jogging frequency and acceleration/ deceleration time for jogging, respectively. These function codes are exclusive to jogging operation. Configure them as needed.
- Using the input terminal command ***JOG*** ("Ready for jogging") switches between the normal operation state and ready-to-jog state.
- Switching between the normal operation state and read-to-jog state with the "STOP + ∧ keys" is possible only when the inverter is stopped.

② Jogging the motor

Hold down the RUN key during which the motor continues jogging. Releasing the key decelerates the motor to a stop.

③ Exiting the ready-to-jog state and returning to the normal operation state

Press the "STOP + ∧ keys" simultaneously.

Chapter 5 FUNCTION CODES

5.1 Function Code Tables

Function codes enable the FRENIC-Mini series of inverters to be set up to match your system requirements.

Each function code consists of a 3-letter alphanumeric string. The first letter is an alphabet that identifies its group and the following two letters are numerals that identify each individual code in the group. The function codes are classified into eight groups: Fundamental Functions (F codes), Extension Terminal Functions (E codes), Control Functions (C codes), Motor 1 Parameters (P codes), High Performance Functions (H codes), Motor 2 Parameters (A codes), Application Functions (J codes) and Link Functions (y codes). To determine the property of each function code, set data to the function code.

The following descriptions supplement those given in the function code tables on page 5-3 and subsequent pages.

■ Changing, validating, and saving function code data when the motor is running

Function codes are indicated by the following based on whether they can be changed or not when the inverter is running:

Notation	Change when running	Validating and saving function code data
Y*	Possible	If the data of the codes marked with Y* is changed, the change will immediately take effect; however, the change is not saved into the inverter's memory. To save the change, press the (FUNC/DATA) key. If you press the (PRG/RESET) key without pressing the (FUNC/DATA) key to exit the current state, then the changed data will be discarded and the previous data will take effect for the inverter operation.
Y	Possible	The data of the codes marked with Y can be changed with the (∧) and (∨) keys regardless of whether the motor is running or not. Pressing the (FUNC/DATA) key will make the change effective and save it into the inverter's memory.
N	Impossible	—

■ Copying data

Connecting an optional remote keypad enables you to copy the function code data stored in the inverter's memory into the keypad's memory (refer to Menu #7 "Data copying" in Programming mode). With this feature, you can easily transfer all function code data saved in a source inverter to other destination inverters.

If the specifications of the source and destination inverters differ, some code data may not be copied to ensure safe operation of your power system. Therefore, you need to set up the uncopied code data individually as necessary. Whether data will be copied or not is detailed with the following symbols in the "Data copy" column of the function code tables given below.

Y: Will be copied unconditionally.

Y1: Will not be copied if the rated capacity differs from the source inverter.

Y2: Will not be copied if the rated input voltage differs from the source inverter.

N: Will not be copied. (Function codes marked with an "N" are not subject to Verify operation, either.)

It is recommended that you set up those function codes which are not subject to the Copy operation individually using Menu #1 "Data setting" as necessary.

Refer to the Remote Keypad Instruction Manual (INR-SI47-0843-E) for details.

■ Using negative logic for programmable I/O terminals

The negative logic signaling system can be used for digital input terminals and transistor output terminals by setting the function code data specifying the properties for those terminals. Negative logic refers to the inverted ON/OFF (logical value 1 (true)/0 (false)) state of input or output signal. An active-ON signal (the function takes effect if the terminal is short-circuited.) in the normal logic system is functionally equivalent to active-OFF signal (the function takes effect if the terminal is opened.) in the negative logic system. An active-ON signal can be switched to active-OFF signal, and vice versa, with the function code data setting.

To set the negative logic system for an input or output terminal, enter data of 1000s (by adding 1000 to the data for the normal logic) in the corresponding function code.

Example: "Coast to a stop" command ***BX*** assigned to any of digital input terminals [X1] to [X3] using any of function codes E01 through E03.

Function code data	***BX***
7	Turning ***BX*** ON causes the motor to coast to a stop. (Active ON)
1007	Turning ***BX*** OFF causes the motor to coast to a stop. (Active OFF)

■ Limitation of data displayed on the LED monitor

Only four digits can be displayed on the 4-digit LED monitor. If you enter more than 4 digits of data valid for a function code, any digits after the 4th digit of the set data will not be displayed; however they will be processed correctly.

The following tables list the function codes available for the FRENIC-Mini series of inverters.

F codes: Fundamental Functions

Code	Name	Data setting range	Incre-ment	Unit	Change when running	Data copying	Default setting	Refer to page:
F00	Data Protection	0: Disable both data protection and digital reference protection 1: Enable data protection and disable digital reference protection 2: Disable data protection and enable digital reference protection 3: Enable both data protection and digital reference protection	–	–	Y	Y	0	5-21
F01	Frequency Command 1	0: UP/DOWN keys on keypad 1: Voltage input to terminal [12] (0 to +10 VDC) 2: Current input to terminal [C1] (4 to 20 mA DC) 3: Sum of voltage and current inputs to terminals [12] and [C1] 4: Built-in potentiometer (POT) 7: Terminal command ***UP/DOWN*** control	–	–	N	Y	4	

Code	Name	Data setting range	Increment	Unit	Change when running	Data copying	Default setting	Refer to page:
F02	Operation Method	0: RUN/STOP keys on keypad (Motor rotational direction specified by terminal command ***FWD***/***REV***) 1: Terminal command ***FWD*** or ***REV*** 2: RUN/STOP keys on keypad (forward) 3: RUN/STOP keys on keypad (reverse)	–	–	N	Y	2	5-22
F03	Maximum Frequency 1	25.0 to 400.0	0.1	Hz	N	Y	ACU:60.0 E:50.0	5-23
F04	Base Frequency 1	25.0 to 400.0	0.1	Hz	N	Y	AU:60.0 CE:50.0	
F05	Rated Voltage at Base Frequency 1	0: Output a voltage in proportion to input voltage 80 to 240: Output an AVR-controlled voltage (for 200 V class series) 160 to 500: Output an AVR-controlled voltage (for 400 V class series)	1	V	N	Y2	ACE:0 U: 230/460	
F06	Maximum Output Voltage 1	80 to 240: Output an AVR-controlled voltage (for 200 V class series) 160 to 500: Output an AVR-controlled voltage (for 400 V class series)	1	V	N	Y2	A: 220/380 C: 200/380 E: 230/400 U: 230/460	
F07	Acceleration Time 1	0.00 to 3600 Note: Entering 0.00 cancels the acceleration time, requiring external soft-start.	0.01	s	Y	Y	6.00	5-25
F08	Deceleration Time 1	0.00 to 3600 Note: Entering 0.00 cancels the deceleration time, requiring external soft-start.	0.01	s	Y	Y	6.00	
F09	Torque Boost 1	0.0 to 20.0 (percentage with respect to "F05: Rated Voltage at Base Frequency 1") Note: This setting takes effect when F37 = 0, 1, 3, or 4.	0.1	%	Y	Y	ACE: See Table A. U:0.0	5-26
F10	Electronic Thermal Overload Protection for Motor 1 (Motor characteristics)	1: For a general-purpose motor and Fuji standard permanent magnet synchronous motor with shaft-driven cooling fan 2: For an inverter-driven motor with separately powered cooling fan	–	–	Y	Y	1	5-28
F11	(Overload detection level)	0.00: Disable, 0.01 to 100.0 1 to 135% of the rated current (allowable continuous drive current) of the motor	0.01	A	Y	Y1 Y2	See Table A.	
F12	(Thermal time constant)	0.5 to 75.0	0.1	min	Y	Y	5.0	
F14	Restart Mode after Momentary Power Failure (Mode selection)	0: Disable restart (Trip immediately) 1: Disable restart (Trip after a recovery from power failure) 2: Trip after decelerate-to-stop *1 4: Enable restart (Restart at the frequency at which the power failure occurred, for general loads) 5: Enable restart (Restart at the starting frequency)	–	–	Y	Y	AC:1 EU:0	5-31
F15	Frequency Limiter (High)	0.0 to 400.0	0.1	Hz	Y	Y	70.0	5-35
F16	(Low)	0.0 to 400.0	0.1	Hz	Y	Y	0.0	

(Note) Alphabets in the Default setting field denote shipping destination: A (Asia), C (China), E (Europe), and U (USA).

*1 Available in the ROM version 0500 or later.

(F codes continued)

Code	Name	Data setting range	Increment	Unit	Change when running	Data copying	Default setting	Refer to page:
F18	Bias (Frequency command 1)	-100.00 to 100.00 *2	0.01	%	Y*	Y	0.00	5-36
F20	DC Braking 1 (Braking starting frequency)	0.0 to 60.0	0.1	Hz	Y	Y	0.0	5-37
F21	(Braking level)	0 to 100	1	%	Y	Y	0	
F22	(Braking time)	0.00 (Disable), 0.01 to 30.00	0.01	s	Y	Y	0.00	
F23	Starting Frequency 1	0.1 to 60.0	0.1	Hz	Y	Y	1.0	5-38
F24	(Holding time)	0.00 to 10.00	0.01	s	Y	Y	0.00	
F25	Stop Frequency	0.1 to 60.0	0.1	Hz	Y	Y	0.2	
F26	Motor Sound (Carrier frequency)	0.75 to 16	1	kHz	Y	Y	ACU:2 E:15	5-39
F27	(Tone)	0: Level 0 (Inactive) 1: Level 1 2: Level 2 3: Level 3	–	–	Y	Y	0	
F30	Analog Output [FMA] (Voltage adjustment)	0 to 300	1	%	Y*	Y	100	5-40
F31	(Function)	Select a function to be monitored from the followings. 0: Output frequency 1 (before slip compensation) 1: Output frequency 2 (after slip compensation) 2: Output current 3: Output voltage 6: Input power 7: PID feedback amount (PV) 9: DC link bus voltage 14: Calibration 15: PID command (SV) 16: PID output (MV)	–	–	Y	Y	0	
F37	Load Selection/Auto Torque Boost/ Auto Energy Saving Operation 1	0: Variable torque load 1: Constant torque load 2: Auto-torque boost 3: Auto-energy saving operation (Variable torque load during ACC/DEC) 4: Auto-energy saving operation (Constant torque load during ACC/DEC) 5: Auto-energy saving operation (Auto-torque boost during ACC/DEC)	–	–	N	Y	1	5-26
F39	Stop Frequency (Holding Time)	0.00 to 10.00	0.01	s	Y	Y	0.00	5-38
F42	Control Mode Selection 1	0: V/f control with slip compensation inactive 1: Dynamic torque vector control 2: V/f control with slip compensation active 11: V/f control for PMSM drive *1	–	–	N	Y	0	5-41

(Note) Alphabets in the Default setting field denote shipping destination: A (Asia), C (China), E (Europe), and U (USA).

*1 Available in the ROM version 0500 or later.

*2 When you make settings from the keypad, the incremental unit is restricted by the number of digits that the LED monitor can display.
(Example) If the setting range is from -200.00 to 200.00, the incremental unit is:
"1" for -200 to -100, "0.1" for -99.9 to -10.0 and for 100.0 to 200.0, and "0.01" for -9.99 to -0.01 and for 0.00 to 99.99.

(F codes continued)

Code	Name	Data setting range	Incre-ment	Unit	Change when running	Data copying	Default setting	Refer to page:
F43	Current Limiter (Mode selection)	0: Disable (No current limiter works.) 1: Enable at constant speed (Disable during ACC/DEC) 2: Enable during ACC/constant speed operation	–	–	Y	Y	2	5-42
F44	(Level)	20 to 180 (The data is interpreted as the rated output current of the inverter for 100%.)	1	%	Y	Y	160	
F50	Electronic Thermal Overload Protection for Braking Resistor (Discharging capability)	1 to 900, OFF (Cancel)	1	kWs	Y	Y1 Y2	OFF	5-43
F51	(Allowable average loss)	0.001 to 50.00	0.001	kW	Y	Y1 Y2	0.001	

E codes: Extension Terminal Functions

Code	Name	Data setting range	Increment	Unit	Change when running	Data copying	Default setting	Refer to page:
E01	Terminal [X1] Function	Selecting function code data assigns the corresponding function to terminals [X1] to [X3] as listed below.	–	–	N	Y	0	5-44
E02	Terminal [X2] Function	0 (1000): Select multistep frequency (***SS1***)	–	–	N	Y	7	
E03	Terminal [X3] Function	1 (1001): Select multistep frequency (***SS2***) 2 (1002): Select multistep frequency (***SS4***) 3 (1003): Select multistep frequency (***SS8***) 4 (1004): Select ACC/DEC time (***RT1***) 6 (1006): Enable 3-wire operation (***HLD***) 7 (1007): Coast to a stop (***BX***) 8 (1008): Reset alarm (***RST***) 9 (1009): Enable external alarm trip (***THR***) 10 (1010): Ready for jogging (***JOG***) 11 (1011): Select frequency command 2/1 (***Hz2/Hz1***) 12 (1012): Select motor 2/motor 1 (***M2/M1***) 13: Enable DC braking (***DCBRK***) 17 (1017): UP (Increase output frequency) (***UP***) 18 (1018): DOWN (Decrease output frequency) (***DOWN***) 19 (1019): Enable data change with keypad (***WE-KP***) 20 (1020): Cancel PID control (***Hz/PID***) 21 (1021): Switch normal/inverse operation (***IVS***) 24 (1024): Enable communications link via RS-485 (***LE***) 33 (1033): Reset PID integral and differential components (***PID-RST***) 34 (1034): Hold PID integral component (***PID-HLD***) Setting the value in parentheses ( ) shown above assigns a negative logic input (Active-OFF) to a terminal. Note that, in the case of ***THR***, data "1009" is for normal logic (Active-ON) and "9," for negative logic (Active-OFF). Signals having no value in parentheses ( ) cannot be used for negative logic.	–	–	N	Y	8	
E10	Acceleration Time 2	0.00 to 3600 Note: Entering 0.00 cancels the acceleration time, requiring external soft-start and -stop.	0.01	s	Y	Y	6.00	5-25
E11	Deceleration Time 2	0.00 to 3600 Note: Entering 0.00 cancels the deceleration time, requiring external soft-start and -stop.	0.01	s	Y	Y	6.00	

(E codes continued)

Code	Name	Data setting range	Incre-ment	Unit	Change when running	Data copying	Default setting	Refer to page:
E20	Terminal [Y1] Function	Selecting function code data assigns the corresponding function to terminals [Y1] and [30A/B/C] as listed below. 0 (1000): Inverter running (***RUN***) 1 (1001): Frequency arrival signal (***FAR***) 2 (1002): Frequency detected (***FDT***) 3 (1003): Undervoltage detected (Inverter stopped) (***LU***) 5 (1005): Inverter output limiting (***IOL***) 6 (1006): Auto-restarting after momentary power failure (***IPF***) 7 (1007): Motor overload early warning (***OL***) 26 (1026): Auto-resetting (***TRY***) 30 (1030): Service lifetime alarm (***LIFE***) 35 (1035): Inverter running 2 (***RUN2***) 36 (1036): Overload prevention control (***OLP***) 37 (1037): Current detected (***ID***) 38 (1038): Current detected 2 (***ID2***) 41 (1041): Low current detected (***IDL***) 43 (1043): Under PID control (***PID-CTL)*** 44 (1044): Motor stopped due to slow flowrate under PID control (***PID-STP)*** 49 (1049): Switched to motor 2 (***SWM2***) 56 (1056): Motor overheat detected by thermistor (***THM***) 57 (1057): Brake signal (***BRKS***) 59 (1059): Terminal [C1] wire break (***C1OFF***) 84 (1084): Maintenance timer (***MNT***) 87 (1087): Frequency arrival detected (***FARFDT***) 99 (1099): Alarm output (for any alarm) (***ALM***) Setting the value in parentheses ( ) shown above assigns a negative logic output to a terminal.	–	–	N	Y	0	5-52
E27	Terminal [30A/B/C] Function		–	–	N	Y	99	
E30	Frequency Arrival (Hysteresis width)	0.0 to 10.0	0.1	Hz	Y	Y	2.5	5-56
E31	Frequency Detection (Detection level)	0.0 to 400.0	0.1	Hz	Y	Y	ACU:60.0 E:50.0	–
E32	(Hysteresis width)	0.0 to 400.0	0.1	Hz	Y	Y	1.0	
E34	Overload Early Warning/ Current Detection/Low Current Detection (Level)	0.00 (Disable), 0.01 to 100.0 Current value of 1 to 200% of the inverter rated current	0.01	A	Y	Y1 Y2	See Table A.	5-57
E35	(Timer)	0.01 to 600.00 *2	0.01	s	Y	Y	10.00	

(Note) Alphabets in the Default setting field denote shipping destination: A (Asia), C (China), E (Europe), and U (USA).

*2 When you make settings from the keypad, the incremental unit is restricted by the number of digits that the LED monitor can display.

(Example) If the setting range is from -200.00 to 200.00, the incremental unit is:
"1" for -200 to -100, "0.1" for -99.9 to -10.0 and for 100.0 to 200.0, and "0.01" for -9.99 to -0.01 and for 0.00 to 99.99.

(E codes continued)

Code	Name	Data setting range	Increment	Unit	Change when running	Data copying	Default setting	Refer to page:
E37	Current Detection 2 (Level)	0.00 (Disable), 0.01 to 100.0 Current value of 1 to 200% of the inverter rated current	0.01	A	Y	Y1 Y2	See Table A.	5-57
E38	(Timer)	0.01 to 600.00 *2	0.01	s	Y	Y	10.00	
E39	Coefficient for Constant Feeding Rate Time	0.000 to 9.999	0.001	–	Y	Y	0.000	5-58
E40	PID Display Coefficient A	-999 to 0.00 to 9990 *3	0.01	–	Y	Y	100	–
E41	PID Display Coefficient B	-999 to 0.00 to 9990 *3	0.01	–	Y	Y	0.00	
E42	LED Display Filter	0.0 to 5.0	0.1	s	Y	Y	0.5	
E43	LED Monitor (Display item)	0: Speed monitor (select by E48) 3: Output current 4: Output voltage 9: Input power 10: PID command 12: PID feedback amount 13: Timer 14: PID output 25: Input watt-hour	–	–	Y	Y	0	
E45	(Note)							
E46								
E47								
E48	LED Monitor (Speed monitor item)	0: Output frequency (Before slip compensation) 1: Output frequency (After slip compensation) 2: Reference frequency 4: Load shaft speed in r/min 5: Line speed in m/min 6: Constant feeding rate time	–	–	Y	Y	0	
E50	Coefficient for Speed Indication	0.01 to 200.00 *2	0.01	–	Y	Y	30.00	5-58
E51	Display Coefficient for Input Watt-hour Data	0.000 (Cancel/reset), 0.001 to 9999	0.001	–	Y	Y	0.010	
E52	Keypad (Menu display mode)	0: Function code data editing mode (Menu #1) 1: Function code data check mode (Menu #2) 2: Full-menu mode (Menus #0 through #6)	–	–	Y	Y	0	5-59

(Note) E45, E46 and E47 appear on the LED monitor, but cannot be used by this inverter.

*2 When you make settings from the keypad, the incremental unit is restricted by the number of digits that the LED monitor can display.
(Example) If the setting range is from -200.00 to 200.00, the incremental unit is:
"1" for -200 to -100, "0.1" for -99.9 to -10.0 and for 100.0 to 200.0, and "0.01" for -9.99 to -0.01 and for 0.00 to 99.99.

*3 The significant figure is in three digits, so the incremental unit changes depending upon the magnitude of absolute values.
(Example) The incremental unit is "10" for 1000 to 9990, "1" for -999 to -100 and for 100 to 999, "0.1" for -99.9 to -10.0 and for 10.0 to 99.9, and "0.01" for -9.99 to 9.99.

(E codes continued)

Code	Name	Data setting range	Incre-ment	Unit	Change when running	Data copying	Default setting	Refer to page:
E60	Built-in Potentiometer (Function selection)	0: None 1: Auxiliary frequency command 1 2: Auxiliary frequency command 2 3: PID process command 1	1	–	N	Y	0	5-59
E61	Terminal [12] Extended Function	Selecting function code data assigns the corresponding function to terminals [12] and [C1] as listed below.	–	–	N	Y	0	
E62	Terminal [C1] Extended Function	0: None 1: Auxiliary frequency command 1 2: Auxiliary frequency command 2 3: PID process command 1 5: PID feedback value	–	–	N	Y	0	
E98	Terminal [FWD] Function	Selecting function code data assigns the corresponding function to terminals [FWD] and [REV] as listed below.	–	–	N	Y	98	5-44
E99	Terminal [REV] Function	0 (1000): Select multistep frequency (***SS1***) 1 (1001): Select multistep frequency (***SS2***) 2 (1002): Select multistep frequency (***SS4***) 3 (1003): Select multistep frequency (***SS8***) 4 (1004): Select ACC/DEC time (***RT1***) 6 (1006): Enable 3-wire operation (***HLD***) 7 (1007): Coast to a stop (***BX***) 8 (1008): Reset alarm (***RST***) 9 (1009): Enable external alarm trip (***THR***) 10 (1010): Ready for jogging (***JOG***) 11 (1011): Select frequency command 2/1 (***Hz2/Hz1***) 12 (1012): Select motor 2/motor 1 (***M2/M1***) 13: Enable DC braking (***DCBRK***) 17 (1017): UP (Increase output frequency) (***UP***) 18 (1018): DOWN (Decrease output frequency) (***DOWN***) 19 (1019): Enable data change with keypad (***WE-KP***) 20 (1020): Cancel PID control (***Hz/PID***) 21 (1021): Switch normal/inverse operation (***IVS***) 24 (1024): Enable communications link via RS-485 (***LE***) 33 (1033): Reset PID integral and differential components (***PID-RST***) 34 (1034): Hold PID integral component (***PID-HLD***) 98: Run forward (***FWD***) 99: Run reverse (***REV***) Setting the value in parentheses ( ) shown above assigns a negative logic input (Active-OFF) to a terminal. Note that, in the case of ***THR***, data "1009" is for normal logic (Active-ON) and "9," for negative logic (Active-OFF). Signals having no value in parentheses ( ) cannot be used for negative logic.	–	–	N	Y	99	

C codes: Control Functions

Code	Name	Data setting range	Increment	Unit	Change when running	Data copying	Default setting	Refer to page:
C01	Jump Frequency 1	0.0 to 400.0	0.1	Hz	Y	Y	0.0	–
C02	2				Y	Y	0.0	
C03	3				Y	Y	0.0	
C04	(Hysteresis width)	0.0 to 30.0	0.1	Hz	Y	Y	3.0	
C05	Multistep Frequency 1	0.00 to 400.00 *2	0.01	Hz	Y	Y	0.00	
C06	2				Y	Y	0.00	
C07	3				Y	Y	0.00	
C08	4				Y	Y	0.00	
C09	5				Y	Y	0.00	
C10	6				Y	Y	0.00	
C11	7				Y	Y	0.00	
C12	8				Y	Y	0.00	
C13	9				Y	Y	0.00	
C14	10				Y	Y	0.00	
C15	11				Y	Y	0.00	
C16	12				Y	Y	0.00	
C17	13				Y	Y	0.00	
C18	14				Y	Y	0.00	
C19	15				Y	Y	0.00	
C20	Jogging Frequency	0.00 to 400.00 *2	0.01	Hz	Y	Y	0.00	
C21	Timer Operation	0: Disable 1: Enable	–	–	N	Y	0	5-60
C30	Frequency Command 2	0: UP/DOWN keys on keypad 1: Voltage input to terminal [12] (0 to +10 VDC) 2: Current input to terminal [C1] (4 to 20 mA DC) 3: Sum of voltage and current inputs to terminals [12] and [C1] 4: Built-in potentiometer (POT) 7: Terminal command ***UP***/***DOWN*** control	–	–	N	Y	2	5-21
C32	Analog Input Adjustment for Terminal [12] (Gain)	0.00 to 200.00 *2	0.01	%	Y*	Y	100.0	5-36
C33	(Filter time constant)	0.00 to 5.00	0.01	s	Y	Y	0.05	5-60
C34	(Gain base point)	0.00 to 100.00 *2	0.01	%	Y*	Y	100.00	5-36
C37	Analog Input Adjustment for Terminal [C1] (Gain)	0.00 to 200.00 *2	0.01	%	Y*	Y	100.00	
C38	(Filter time constant)	0.00 to 5.00	0.01	s	Y	Y	0.05	5-60
C39	(Gain base point)	0.00 to 100.00 *2	0.01	%	Y*	Y	100.00	5-36
C40	Terminal [C1] Input Range Selection	0: 4 to 20 mA 1: 0 to 20 mA	–	–	N	Y	0	–
C50	Bias (Frequency command 1) (Bias base point)	0.00 to 100.00 *2	0.01	%	Y*	Y	0.00	5-36
C51	Bias (PID command 1) (Bias value)	-100.00 to 100.00 *2	0.01	%	Y*	Y	0.00	–
C52	(Bias base point)	0.00 to 100.00 *2	0.01	%	Y*	Y	0.00	

*2 When you make settings from the keypad, the incremental unit is restricted by the number of digits that the LED monitor can display.
(Example) If the setting range is from -200.00 to 200.00, the incremental unit is:
"1" for -200 to -100, "0.1" for -99.9 to -10.0 and for 100.0 to 200.0, and "0.01" for -9.99 to -0.01 and for 0.00 to 99.99.

(C codes continued)

Code	Name	Data setting range	Increment	Unit	Change when running	Data copying	Default setting	Refer to page:
C94	Jump Frequency 4 *1	0.0 to 400.0	0.1	Hz	Y	Y	0.0	–
C95	5				Y	Y	0.0	
C96	6				Y	Y	0.0	
C99	Digital Reference Frequency *1	0.00 to 400.00	0.01	Hz	–	Y	0.00	

P codes: Motor 1 Parameters

Code	Name	Data setting range	Increment	Unit	Change when running	Data copying	Default setting	Refer to page:
P02	Motor 1 (Rated capacity)	0.01 to 30.00 (kW when P99 = 0, 3, 4, 20 or 21) 0.01 to 30.00 (HP when P99 = 1)	0.01 0.01	kW HP	N	Y1 Y2	See Table A.	5-61
P03	(Rated current)	0.00 to 100.0	0.01	A	N	Y1 Y2	Rated value of Fuji standard motor	
P04	(Auto-tuning)	0: Disable 1: Tune when the motor stops (%R1, %X) 2: Tune when the motor is rotating under V/f control (%R1, %X, no-load current, slip frequency).	–	–	N	N	0	
P06	(No-load current)	0.00 to 50.00	0.01	A	N	Y1 Y2	Rated value of Fuji standard motor	
P07	(%R1)	0.00 to 50.00	0.01	%	Y	Y1 Y2		
P08	(%X)	0.00 to 50.00	0.01	%	Y	Y1 Y2		
P09	(Slip compensation gain for driving)	0.0 to 200.0	0.1	%	Y*	Y	100.0	5-62
P10	(Slip compensation response time)	0.01 to 10.00	0.01	s	Y	Y1 Y2	1.00	
P11	(Slip compensation gain for braking)	0.0 to 200.0	0.1	%	Y*	Y	100.0	
P12	(Rated slip frequency)	0.00 to 15.00	0.01	Hz	N	Y1 Y2	Rated value of Fuji standard motor	5-61
P60	Permanent magnet synchronous motor *1 (Armature resistance)	0.00 (Disable PMSM), 0.01 to 50.00	0.01	Ω	Y	Y1 Y2	0.00	–
P61	(d-axis inductance)	0.00 (Disable high-efficiency control), 0.01 to 500.0	0.01	mH	Y	Y1 Y2	0.00	
P62	(q-axis inductance)	0.00 (Disable PMSM), 0.01 to 500.0	0.01	mH	Y	Y1 Y2	0.00	

*1 The PMSM drive is available in the ROM version 0500 or later.

(P codes continued)

Code	Name	Data setting range	Increment	Unit	Change when running	Data copying	Default setting	Refer to page:
P63	Permanent magnet synchronous motor *1 (Induced voltage)	0 (Disable PMSM), 80 to 240 (for 200 V class series) 160 to 500 (for 400 V class series)	1	V	N	Y2	0	–
P74	(Reference current at starting)	10 to 200	1	%	Y	Y1 Y2	80	
P89	(Control switching level)	10 to 100	1	%	Y	Y1 Y2	10	
P90	(Overcurrent protection level)	0.00 (Disable), 0.01 to 100.0	0.01	A	Y	Y1 Y2	0.00	
P91	(d-axis compensation gain under damping control)	0.0 to 25.0, 999 (Table value)	0.1	–	Y	Y1 Y2	999	
P92	(q-axis compensation gain under damping control)	0.0 to 25.0, 999 (Table value)	0.1	–	Y	Y1 Y2	999	
P93	(Step-out detection current level)	0.0 to 100, 999 (Table value)	1	%	Y	Y1 Y2	999	
P99	Motor 1 Selection	0: Motor characteristics 0 (Fuji standard IM, 8-series) 1: Motor characteristics 1 (HP rating IM) 3: Motor characteristics 3 (Fuji standard IM, 6-series) 4: Other motors (IM) 20: Other motors (PMSM) 21: Fuji standard PMSM without sensor	–	–	N	Y1 Y2	0	5-63

*1 The PMSM drive is available in the ROM version 0500 or later.

H codes: High Performance Functions

Code	Name	Data setting range	Incre-ment	Unit	Change when running	Data copying	Default setting	Refer to page:
H03	Data Initialization	0: Disable initialization 1: Initialize all function code data to the factory defaults 2: Initialize motor 1 parameters 3: Initialize motor 2 parameters	–	–	N	N	0	5-64
H04	Auto-reset (Times)	0 (Disable), 1 to 10	1	times	Y	Y	0	5-70
H05	(Reset interval)	0.5 to 20.0	0.1	s	Y	Y	5.0	
H06	Cooling Fan ON/OFF Control	0: Disable (Cooling fan always ON) 1: Enable (ON/OFF control effective)	–	–	Y	Y	0	5-71
H07	Acceleration/ Deceleration Pattern	0: Linear 1: S-curve (Weak) 2: S-curve (Strong) 3: Curvilinear	–	–	Y	Y	0	
H08	Rotational Direction Limitation	0: Disable 1: Enable (Reverse rotation inhibited) 2: Enable (Forward rotation inhibited)	–	–	N	Y	0	–
H11	Deceleration Mode	0: Normal deceleration 1: Coast-to-stop	–	–	Y	Y	0	5-72
H12	Instantaneous Overcurrent Limiting (Mode selection)	0: Disable 1: Enable	–	–	Y	Y	1	5-73
H13	Restart Mode after Momentary Power Failure (Restart time)	0.1 to 10.0	0.1	s	Y	Y1 Y2	0.5	5-31
H14	(Frequency fall rate)	0.00 (Deceleration time selected) 0.01 to 100.00 999 (Depends upon current limiter)	0.01	Hz/s	Y	Y	999	
H15	(Continuous running level) *1	200 to 300 (for 200 V class series) 400 to 600 (for 400 V class series)	1	V	Y	Y2	235 470	–
H26	Thermistor for Motor (Mode selection)	0: Disable 1: Enable (With PTC, the inverter immediately trips with 0H4 displayed.) 2 Enable (With PTC, the inverter issues output signal ***THM*** and continues to run.	–	–	Y	Y	0	
H27	(Level)	0.00 to 5.00	0.01	V	Y	Y	0.16	
H30	Communications Link Function (Mode selection)	Frequency command / Run command 0: F01/C30 / F02 1: RS-485 / F02 2: F01/C30 / RS-485 3: RS-485 / RS-485	–	–	Y	Y	0	
H42	Capacitance of DC Link Bus Capacitor	Indication for replacement of DC link bus capacitor (0000 to FFFF in hex.)	1	–	Y	N	–	
H43	Cumulative Run Time of Cooling Fan	Indication for replacement of cooling fan (0 to 9999, in units of 10 hours)	1	10h	Y	N	–	
H44	Startup Counter of Motor 1	Indication of cumulative startup count (0000 to FFFF in hex.)	–	–	Y	N	–	
H45	Mock Alarm	0: Disable 1: Enable (Once a mock alarm occurs, the data automatically returns to 0.)	–	–	Y	N	0	5-74
H47	Initial Capacitance of DC Link Bus Capacitor	Indication for replacement of DC link bus capacitor (0000 to FFFF in hex.)	1	–	Y	N	–	–
H48	Cumulative Run Time of Capacitors on Printed Circuit Boards	Indication for replacement of capacitors on printed circuit boards (0 to 9999, in units of 10 hours)	1	10h	Y	N	–	

*1 Available in the ROM version 0500 or later.

(H codes continued)

Code	Name	Data setting range	Increment	Unit	Change when running	Data copying	Default setting	Refer to page:
H50	Non-linear V/f Pattern 1 (Frequency)	0.0 (Cancel), 0.1 to 400.0	0.1	Hz	N	Y	0.0	5-23
H51	(Voltage)	0 to 240: Output an AVR-controlled voltage (for 200 V class series) 0 to 500: Output an AVR-controlled voltage (for 400 V class series)	1	V	N	Y2	ACE:0 U: 230/460	
H52	Non-linear V/f Pattern 2 (Frequency)	0.0 (Cancel), 0.1 to 400.0	0.1	Hz	N	Y	0.0	
H53	(Voltage)	0 to 240: Output an AVR-controlled voltage (for 200 V class series) 0 to 500: Output an AVR-controlled voltage (for 400 V class series)	1	V	N	Y2	0	
H54	ACC/DEC Time (Jogging operation)	0.00 to 3600	0.01	s	Y	Y	6.00	–
H61	***UP***/***DOWN*** Control (Initial frequency setting)	0: 0.00 1: Last ***UP***/***DOWN*** command value on releasing a run command	–	–	N	Y	1	
H63	Low Limiter (Mode selection)	0: Limit by F16 (Frequency limiter: Low) and continue to run 1: If the output frequency lowers below the one limited by F16 (Frequency limiter: Low), decelerate to stop the motor.	–	–	Y	Y	0	5-35
H64	(Lower limiting frequency)	0.0 (Depends on F16 (Frequency limiter: Low)) 0.1 to 60.0	0.1	Hz	Y	Y	2.0	–
H69	Automatic Deceleration (Anti-regenerative control) (Mode selection)	0: Disable 1: Enable (Lengthen the deceleration time to three times the specified time under voltage limiting control.) (Compatible with the original FRENIC-Mini series FRN□□□C1□-□□) 2: Enable (Torque limit control: Cancel the anti-regenerative control if the actual deceleration time exceeds three times the specified one.) 4: Enable (Torque limit control: Disable force-to-stop processing.)	–	–	Y	Y	0	5-74
H70	Overload Prevention Control	0.00: Follow deceleration time specified by F08/E11 0.01 to 100.0, 999 (Cancel)	0.01	Hz/s	Y	Y	999	5-75
H71	Deceleration Characteristics	0: Disable 1: Enable	–	–	Y	Y	0	
H76	Automatic Deceleration (Frequency increment limit for braking)	0.0 to 400.0	0.1	Hz	Y	Y	5.0	5-74
H78	Maintenance Interval *1	0: Disable, 1 to 9999 (in units of 10 hours)	1	–	Y	N	8760	–
H79	Preset Startup Count for Maintenance *1	0000: Disable, 0001 to FFFF (hex.)	1	–	Y	N	0000	
H80	Output Current Fluctuation Damping Gain for Motor 1	0.00 to 0.40	0.01	–	Y	Y	0.20	

(Note) Alphabets in the Default setting field denote shipping destination: A (Asia), C (China), E (Europe), and U (USA).

*1 Available in the ROM version 0500 or later.

(H codes continued)

Code	Name	Data setting range	Increment	Unit	Change when running	Data copying	Default setting	Refer to page:
H89	Electronic Thermal Overload Protection for Motor (Data retention)	0: Disable 1: Enable	–	–	Y	Y	1	–
H91	PID Feedback Wire Break Detection (Terminal [C1])	0.0: Disable alarm detection 0.1 to 60.0: After the specified time, cause alarm	0.1	s	Y	Y	0.0	
H92	Continuity of Running *1 (P)	0.000 to 10.000 times; 999	0.001	times	Y	Y1 Y2	999	
H93	(I)	0.010 to 10.000 s; 999	0.001	s	Y	Y1 Y2	999	
H94	Cumulative Run Time of Motor 1	0 to 9999 (in units of 10 hours)	–	–	N	N	–	5-76
H95	DC Braking (Braking response mode)	0: Slow 1: Quick	–	–	Y	Y	0	5-37
H96	STOP Key Priority/Start Check Function	Data STOP key priority Start check function 0: Disable Disable 1: Enable Disable 2: Disable Enable 3: Enable Enable	–	–	Y	Y	ACE:0 U:3	–
H97	Clear Alarm Data	0: Disable 1: Clear alarm data	–	–	Y	N	0	5-74
H98	Protection/Maintenance Function (Mode selection)	Bit 0: Lower the carrier frequency automatically (0: Disable; 1: Enable) Bit 1: Detect input phase loss (0: Disable; 1: Enable) Bit 2: Detect output phase loss (0: Disable; 1: Enable) Bit 3: Select life judgment threshold of DC link bus capacitor (0: Factory default level; 1: User setup level) Bit 4: Judge the life of DC link bus capacitor (0: Disable; 1: Enable)	–	–	Y	Y	19	5-76

(Note) Alphabets in the Default setting field denote shipping destination: A (Asia), C (China), E (Europe), and U (USA).

*1 Available in the ROM version 0500 or later.

A codes: Motor 2 Parameters

Code	Name	Data setting range	Increment	Unit	Change when running	Data copying	Default setting	Refer to page:
A01	Maximum Frequency 2	25.0 to 400.0	0.1	Hz	N	Y	ACU:60.0 E:50.0	–
A02	Base Frequency 2	25.0 to 400.0	0.1	Hz	N	Y	AU:60.0 CE:50.0	
A03	Rated Voltage at Base Frequency 2	0: Output a voltage in proportion to input voltage 80 to 240V: Output an AVR-controlled voltage (for 200 V class series) 160 to 500V: Output an AVR-controlled voltage (for 400 V class series)	1	V	N	Y2	ACE:0 U: 230/460	
A04	Maximum Output Voltage 2	80 to 240V: Output an AVR-controlled voltage (for 200 V class series) 160 to 500V: Output an AVR-controlled voltage (for 400 V class series)	1	V	N	Y2	A: 220/380 C: 200 380 E: 230/400 U: 230/460	
A05	Torque Boost 2	0.0% to 20.0% (percentage with respect to "A03: Rated Voltage at Base Frequency 2")	0.1	%	Y	Y	See Table A.	
A06	Electronic Thermal Overload Protection for Motor 2 (Motor characteristics)	1: For a general-purpose motor with shaft-driven cooling fan 2: For an inverter-driven motor with separately powered cooling fan	–	–	Y	Y	1	
A07	(Overload detection level)	0.00 (Disable), 0.01 to 100.0 1 to 135% of the rated current (allowable continuous drive current) of the motor	0.01	A	Y	Y1 Y2	See Table A.	
A08	(Thermal time constant)	0.5 to 75.0	0.1	min	Y	Y	5.0	
A09	DC Braking 2 (Braking starting frequency)	0.0 to 60.0	0.1	Hz	Y	Y	0.0	
A10	(Braking level)	0 to 100	1	%	Y	Y	0	
A11	(Braking time)	0.00 : Disable 0.01 to 30.00	0.01	s	Y	Y	0.00	
A12	Starting Frequency 2	0.1 to 60.0	0.1	Hz	Y	Y	1.0	
A13	Load Selection/ Auto Torque Boost/ Auto Energy Saving Operation 2	0: Variable torque load 1: Constant torque load 2: Auto-torque boost 3: Auto-energy saving operation (Variable torque load during ACC/DEC) 4: Auto-energy saving operation (Constant torque load during ACC/DEC) 5: Auto-energy saving operation (Auto-torque boost during ACC/DEC)	–	–	N	Y	1	
A14	Control Mode Selection 2	0: V/f control with slip compensation inactive 1: Dynamic torque vector control 2: V/f control with slip compensation active	–	–	N	Y	0	
A16	Motor 2 (Rated capacity)	0.01 to 30.00 (kW when A39 = 0, 3, or 4) 0.01 to 30.00 (HP when A39 = 1)	0.01 0.01	kW HP	N	Y1 Y2	See Table A.	
A17	(Rated current)	0.00 to 100.0	0.01	A	N	Y1 Y2	Rated value of Fuji standard motor	

(Note) Alphabets in the Default setting field denote shipping destination: A (Asia), C (China), E (Europe), and U (USA).

(A codes continued)

Code	Name	Data setting range	Increment	Unit	Change when running	Data copying	Default setting	Refer to page:
A18	Motor 2 (Auto-tuning)	0: Disable 1: Tune when the motor stops (%R1 and %X) 2: Tune when the motor is rotating under V/f control (%R1, %X, no-load current, slip freq.)	–	–	N	N	0	–
A20	(No-load current)	0.00 to 50.0	0.01	A	N	Y1 Y2	Rated value of Fuji standard motor	
A21	(%R1)	0.00 to 50.00	0.01	%	Y	Y1 Y2	Rated value of Fuji standard motor	
A22	(%X)	0.00 to 50.00	0.01	%	Y	Y1 Y2	Rated value of Fuji standard motor	
A23	(Slip compensation gain for driving)	0.0 to 200.0	0.1	%	Y*	Y	100.0	
A24	(Slip compensation response time)	0.01 to 10.00	0.01	s	Y	Y1 Y2	1.00	
A25	(Slip compensation gain for braking)	0.0 to 200.0	0.1	%	Y*	Y	100.0	
A26	(Rated slip frequency)	0.00 to 15.00	0.01	Hz	N	Y1 Y2	Rated value of Fuji standard motor	
A39	Motor 2 Selection	0: Motor characteristics 0 (Fuji standard IM, 8-series) 1: Motor characteristics 1 (HP rating IM) 3: Motor characteristics 3 (Fuji standard IM, 6-series) 4: Other motors (IM)	–	–	N	Y1 Y2	ACE:0 U:1	
A41	Output Current Fluctuation Damping Gain for Motor 2	0.00 to 0.40	0.01	–	Y	Y	0.20	
A51	Cumulative Run Time of Motor 2	0 to 9999 (in units of 10 hours)	–	–	N	N	–	
A52	Startup Counter for Motor 2	Indication of cumulative startup count (0000 to FFFF in hex.)	–	–	Y	N	–	

(Note) Alphabets in the Default setting field denote shipping destination: A (Asia), C (China), E (Europe), and U (USA).

J codes: Application Functions

Code	Name	Data setting range	Increment	Unit	Change when running	Data copying	Default setting	Refer to page:
J01	PID Control (Mode selection)	0: Disable 1: Enable (Process control, normal operation) 2: Enable (Process control, inverse operation)	–	–	N	Y	0	–
J02	(Remote command SV)	0: UP/DOWN keys on keypad 1: PID process command 1 (Analog input terminals [12] and [C1]) 3: Terminal command ***UP***/***DOWN*** control 4: Command via communications link	–	–	N	Y	0	
J03	P (Gain)	0.000 to 30.000 *2	0.001	times	Y	Y	0.100	
J04	I (Integral time)	0.0 to 3600.0 *2	0.1	s	Y	Y	0.0	
J05	D (Differential time)	0.00 to 600.00 *2	0.01	s	Y	Y	0.00	
J06	(Feedback filter)	0.0 to 900.0	0.1	s	Y	Y	0.5	
J15	(Operation level for slow flowrate stop)	0.0 (Disable), 1.0 to 400.0	0.1	Hz	Y	Y	0.0	
J16	(Elapsed time from slow flowrate stop)	0 to 3600	1	s	Y	Y	30	
J17	(Initiation frequency)	0.0 to 400.0	0.1	Hz	Y	Y	0.0	
J23	(Initiation deviation level for slow flowrate stop)	0.0 to 100.0	0.1	%	Y	Y	0.0	
J24	(Start latency time for slow flowrate stop)	0 to 3660	1	s	Y	Y	0	
J68	Braking Signal (Brake OFF current)	0 to 200	1	%	Y	Y	100	
J69	(Brake OFF frequency)	0.0 to 25.0	0.1	Hz	Y	Y	1.0	
J70	(Brake OFF timer)	0.0 to 5.0	0.1	s	Y	Y	1.0	
J71	(Brake ON frequency)	0.0 to 25.0	0.1	Hz	Y	Y	1.0	
J72	(Brake ON timer)	0.0 to 5.0	0.1	s	Y	Y	1.0	

*2 When you make settings from the keypad, the incremental unit is restricted by the number of digits that the LED monitor can display.

(Example) If the setting range is from -200.00 to 200.00, the incremental unit is:
"1" for -200 to -100, "0.1" for -99.9 to -10.0 and for 100.0 to 200.0, and "0.01" for -9.99 to -0.01 and for 0.00 to 99.99.

y codes: Link Functions

Code	Name	Data setting range	Increment	Unit	Change when running	Data copying	Default setting	Refer to page:
y01	RS-485 Communication 1 (Station address)	1 to 255	1	–	N	Y	1	–
y02	(Communications error processing)	0: Immediately trip with alarm Er8 1: Trip with alarm Er8 after running for the period specified by timer y03 2: Retry during the period specified by timer y03. If the retry fails, trip with alarm Er8. If it succeeds, continue to run. 3: Continue to run	–	–	Y	Y	0	
y03	(Timer)	0.0 to 60.0	0.1	s	Y	Y	2.0	
y04	(Baud rate)	0: 2400 bps 1: 4800 bps 2: 9600 bps 3: 19200 bps 4: 38400 bps	–	–	Y	Y	3	
y05	(Data length)	0: 8 bits 1: 7 bits	–	–	Y	Y	0	
y06	(Parity check)	0: None (2 stop bits for Modbus RTU) 1: Even parity (1 stop bit for Modbus RTU) 2: Odd parity (1 stop bit for Modbus RTU) 3: None (1 stop bit for Modbus RTU)	–	–	Y	Y	0	
y07	(Stop bits)	0: 2 bits 1: 1 bit	–	–	Y	Y	0	
y08	(No-response error detection time)	0: No detection 1 to 60	1	s	Y	Y	0	
y09	(Response interval)	0.00 to 1.00	0.01	s	Y	Y	0.01	
y10	(Protocol selection)	0: Modbus RTU protocol 1: SX protocol (FRENIC Loader protocol) 2: Fuji general-purpose inverter protocol	–	–	Y	Y	1	
y97	Communication Data Storage Selection *1	0: Save into nonvolatile storage (Rewritable times limited) 1: Write into temporary storage (Rewritable times unlimited) 2: Save all data from temporary storage to nonvolatile one (After saving data, the y97 data automatically reverts to "1.")	–	–	Y	Y	0	
y99	Loader Link Function (Mode selection)	Frequency command / Run command 0: Follow H30 data / Follow H30 data 1: Via RS-485 link (Loader) / Follow H30 data 2: Follow H30 data (Loader) / Via RS-485 link (Loader) 3: Via RS-485 link (Loader) / Via RS-485 link (Loader)	–	–	Y	N	0	

*1 Available in the ROM version 0500 or later.

Table A Fuji Standard Motor Parameters

Power supply voltage	Applicable motor rating (kW)	Inverter type	Fuji's standard torque boost (%)	Nominal rated current of Fuji standard motor (A)				Nominal rated capacity of Fuji standard motor (kW)
			Function code F09/A05	Function codes F11/A07/E34/E37				Function code P02/A16
				Shipping destination (version)				
				Asia	China	Europe	USA	
Three-phase 200 V	0.1	FRN0001C2S-2☐	8.4	0.62	0.68	0.73	0.63	0.10
	0.2	FRN0002C2S-2☐	8.4	1.18	1.30	1.38	1.21	0.20
	0.4	FRN0004C2S-2☐	7.1	2.10	2.30	2.36	2.11	0.40
	0.75	FRN0006C2S-2☐	6.8	3.29	3.60	3.58	3.27	0.75
	1.5	FRN0010C2S-2☐	6.8	5.56	6.10	5.77	5.44	1.50
	2.2	FRN0012C2S-2☐	6.8	8.39	9.20	8.80	8.24	2.20
	3.7	FRN0020C2S-2☐	5.5	13.67	15.00	14.26	13.40	3.70
Three-phase 400 V	0.4	FRN0002C2S-4☐	7.1	1.04	1.15	1.15	1.06	0.40
	0.75	FRN0004C2S-4☐	6.8	1.72	1.82	1.80	1.63	0.75
	1.5	FRN0005C2S-4☐	6.8	3.10	3.20	3.10	2.76	1.50
	2.2	FRN0007C2S-4☐	6.8	4.54	4.72	4.60	4.12	2.20
	3.7 (4.0)*	FRN0011C2S-4☐	5.5	7.43	7.70	7.50	6.70	3.70
Single-phase 200 V	0.1	FRN0001C2S-7☐	8.4	0.62	0.68	0.73	0.63	0.10
	0.2	FRN0002C2S-7☐	8.4	1.18	1.30	1.38	1.21	0.20
	0.4	FRN0004C2S-7☐	7.1	2.10	2.30	2.36	2.11	0.40
	0.75	FRN0006C2S-7☐	6.8	3.29	3.60	3.58	3.27	0.75
	1.5	FRN0010C2S-7☐	6.8	5.56	6.10	5.77	5.44	1.50
	2.2	FRN0012C2S-7☐	6.8	8.39	9.20	8.80	8.24	2.20

Note: A box (☐) in the above table replaces A, C, E, or U depending on the shipping destination. For three-phase 200 V class series of inverters, it replaces A or U.

* 4.0 kW for the EU. The inverter type is FRN0011C2S-4E.

5.2 Details of Function Codes

This section provides the details of the function codes frequently used for the FRENIC-Mini series of inverters.

📖 For details about the function codes given below and other function codes not given below, refer to the FRENIC-Mini User's Manual (24A7-E-0023), Chapter 9 "FUNCTION CODES."

F00 Data Protection

F00 specifies whether to protect function code data (except F00) and digital reference data (such as frequency command, PID command and timer operation) from accidentally getting changed by pressing the ⌃ / ⌄ keys.

Data for F00	Function
0	Disable both data protection and digital reference protection, allowing you to change both function code data and digital reference data with the ⌃ / ⌄ keys.
1	Enable data protection and disable digital reference protection, allowing you to change digital reference data with the ⌃ / ⌄ keys. But you cannot change function code data (except F00).
2	Disable data protection and enable digital reference protection, allowing you to change function code data with the ⌃ / ⌄ keys. But you cannot change digital reference data.
3	Enable both data protection and digital reference protection, not allowing you to change function code data or digital reference data with the ⌃ / ⌄ keys.

Enabling the protection disables the ⌃ / ⌄ keys to change function code data.

To change F00 data, simultaneous keying of STOP + ⌃ (from 0 to 1) or STOP + ⌄ (from 1 to 0) keys is required.

Tip Even when F00 = 1 or 3, function code data can be changed via the communications link.

For similar purposes, ***WE-KP***, a signal enabling editing of function code data from the keypad is provided as a terminal command for digital input terminals. (Refer to the descriptions of E01 through E03.)

F01, C30 Frequency Command 1, Frequency Command 2

F01 or C30 sets the command source that specifies reference frequency 1 or reference frequency 2, respectively.

Data for F01, C30	Function
0	Enable ⌃ / ⌄ keys on the keypad. (Refer to Chapter 3 "OPERATION USING THE KEYPAD.")
1	Enable the voltage input to terminal [12] (0 to +10 VDC, maximum frequency obtained at +10 VDC).

Data for F01, C30	Function
2	Enable the current input to terminal [C1] (+4 to +20 mA DC or 0 to +20 mA DC, maximum frequency obtained at +20 mA DC). 🕮 Using function code C40 expands the input range from "+4 to +20 mA DC" to "0 to +20 mA DC."
3	Enable the sum of voltage (0 to +10 VDC, maximum frequency obtained at +10 VDC) and current inputs (+4 to +20 mA DC or 0 to +20 mA DC, maximum frequency obtained at +20 mA DC) given to terminals [12] and [C1], respectively. 🕮 Using function code C40 expands the input range from "+4 to +20 mA DC" to "0 to +20 mA DC." Note: If the sum exceeds the maximum frequency (F03, A01), the maximum frequency will apply.
4	Enable the built-in potentiometer (POT). (Maximum frequency obtained at full scale of the POT)
7	Enable ***UP*** and ***DOWN*** commands assigned to the digital input terminals. The ***UP*** and ***DOWN*** should be assigned to any of digital input terminals [X1] to [X3] beforehand with any of E01 to E03 (data = 17 and 18).

Note In addition to the frequency command sources described above, higher priority command sources including communications link and multistep frequency are provided. For details, refer to the block diagram given in FRENIC-Mini User's Manual (24A7-E-0023), Chapter 4, Section 4.2 "Drive Frequency Command Generator."

Tip
- For frequency settings made by terminals [12] (voltage) and [C1] (current) and by the built-in potentiometer, setting the gain and bias changes the relationship between those frequency settings and the drive frequency. Refer to function code F18 for details.
- For the inputs to terminals [12] (voltage) and [C1] (current), low-pass filters can be enabled.
- Using the terminal command ***Hz2/Hz1*** assigned to one of the digital input terminals switches between frequency command 1 (F01) and frequency command 2 (C30). Refer to function codes E01 to E03.

F02 Operation Method

F02 selects the source that specifies a run command for running the motor.

Data for F02	Run Command Source	Description
0	Keypad (Rotation direction specified by terminal command)	Enable the RUN / STOP keys to run and stop the motor. The rotation direction of the motor is specified by terminal command ***FWD*** or ***REV***.
1	External signals	Enable terminal command ***FWD*** or ***REV*** to run and stop the motor.
2	Keypad (Forward rotation)	Enable RUN / STOP keys to run and stop the motor. Note that this run command enables only the forward rotation. There is no need to specify the rotation direction.

Data for F02	Run Command Source	Description
3	Keypad (Reverse rotation)	Enable (RUN) / (STOP) keys to run and stop the motor. Note that this run command enables only the reverse rotation. There is no need to specify the rotation direction.

Note

- When function code F02 = 0 or 1, the "Run forward" ***FWD*** and "Run reverse" ***REV*** terminal commands must be assigned to terminals [FWD] and [REV], respectively.
- When the ***FWD*** or ***REV*** is ON, the F02 data cannot be changed.
- When assigning the ***FWD*** or ***REV*** to terminal [FWD] or [REV] with F02 being set to "1," be sure to turn the target terminal OFF beforehand; otherwise, the motor may unintentionally rotate.
- In addition to the run command sources described above, higher priority command sources including communications link are provided. For details, refer to the FRENIC-Mini User's Manual (24A7-E-0023).

F03 Maximum Frequency 1

F03 specifies the maximum frequency (for motor 1) to limit the output frequency. Specifying the maximum frequency exceeding the rating of the equipment driven by the inverter may cause damage or a dangerous situation. Make sure that the maximum frequency setting matches the equipment rating.

⚠WARNING

The inverter can easily accept high-speed operation. When changing the speed setting, carefully check the specifications of motors or equipment beforehand.

Otherwise injuries could occur.

Tip

Modifying F03 data to allow a higher reference frequency requires also changing F15 data specifying a frequency limiter (high).

F04 Base Frequency 1
F05 Rated Voltage at Base Frequency 1
F06 Maximum Output Voltage 1
H50, H51 Non-linear V/f Pattern 1 (Frequency and Voltage)
H52, H53 Non-linear V/f Pattern 2 (Frequency and Voltage)

These function codes specify the base frequency and the voltage at the base frequency essentially required for running the motor properly. If combined with the related function codes H50 through H53, these function codes may profile the non-linear V/f pattern by specifying increase or decrease in voltage at any point on the V/f pattern.

The following description includes setups required for the non-linear V/f pattern.

At high frequencies, the motor impedance may increase, resulting in an insufficient output voltage and a decrease in output torque. This feature is used to increase the voltage with the maximum output voltage 1 to prevent this problem from happening. Note, however, that you cannot increase the output voltage beyond the voltage of the inverter's input power.

■ Base Frequency 1 (F04)

Set the rated frequency printed on the nameplate labeled on the motor.

■ Rated Voltage at Base Frequency (F05)

Set "0" or the rated voltage printed on the nameplate labeled on the motor.

- If "0" is set, the rated voltage at base frequency is determined by the power source of the inverter. The output voltage will vary in line with any variance in input voltage.
- If the data is set to anything other than "0," the inverter automatically keeps the output voltage constant in line with the setting. When any of the auto torque boost settings, auto energy saving or slip compensation is active, the voltage settings should be equal to the rated voltage of the motor.

■ Non-linear V/f Patterns 1 and 2 for Frequency (H50 and H52)

Set the frequency component at an arbitrary point of the non-linear V/f pattern.

(Setting "0.0" to H50 or H52 disables the non-linear V/f pattern operation.)

■ Non-linear V/f Patterns 1 and 2 for Voltage (H51 and H53)

Sets the voltage component at an arbitrary point of the non-linear V/f pattern.

■ Maximum Output Voltage (F06)

Set the voltage for the maximum frequency 1 (F03).

Note

- If F05 (Rated Voltage at Base Frequency 1) is set to "0," settings of H50 through H53 and F06 do not take effect. (When the non-linear point is below the base frequency, the linear V/f pattern applies; when it is above, the output voltage is kept constant.)
- When the auto torque boost (F37) is enabled, the non-linear V/f pattern takes no effect.

Examples:

■ Normal (linear) V/f pattern

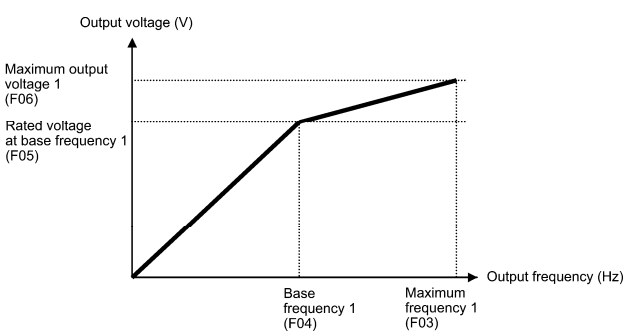

■ V/f pattern with two non-linear points

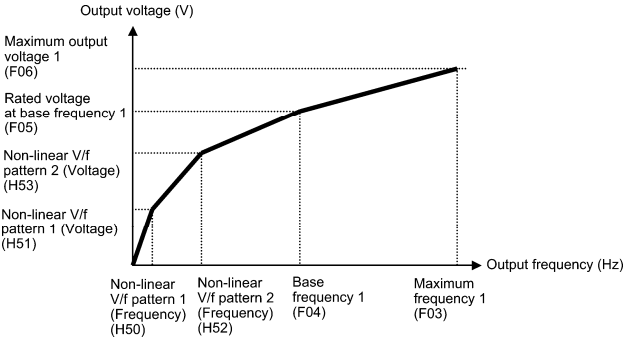

F07	Acceleration Time 1
F08	Deceleration Time 1
E10	Acceleration Time 2
E11	Deceleration Time 2

F07 specifies the acceleration time, the length of time the frequency increases from 0 Hz to the maximum frequency. F08 specifies the deceleration time, the length of time the frequency decreases from the maximum frequency down to 0 Hz.

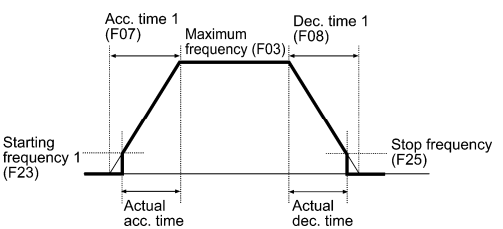

Note

- Selecting an S-shaped pattern or curvilinear acceleration/deceleration pattern with function code H07 (Acceleration/deceleration pattern) makes the actual acceleration/deceleration times longer than the specified ones. Refer to the descriptions of function code H07.
- Specifying an improperly short acceleration/deceleration time may activate the current limiter or anti-regenerative control, resulting in a longer acceleration/ deceleration time than the specified one.

Tip

Acceleration/deceleration time 1 (F07, F08) and acceleration/deceleration time 2 (E10, E11) are switched by terminal command ***RT1*** assigned to any of the digital input terminals with any of function codes E01 through E03.

F37 specifies V/f pattern, torque boost type, and auto energy saving operation for optimizing the operation in accordance with the characteristics of the load. F09 specifies the type of torque boost in order to provide sufficient starting torque.

Data for F37	V/f pattern	Torque boost (F09)	Auto energy saving	Applicable load
0	Variable torque V/f pattern	Torque boost specified by F09	Disable	Variable torque load (General purpose fans and pumps)
1	Linear V/f pattern			Constant torque load
2		Auto torque boost		Constant torque load (To be selected if a motor may be over-excited at no load.)
3	Variable torque V/f pattern	Torque boost specified by F09	Enable	Variable torque load (General purpose fans and pumps)
4	Linear V/f pattern			Constant torque load
5		Auto torque boost		Constant torque load (To be selected if a motor may be over-excited at no load.)

Note: If a required "load torque + acceleration toque" is more than 50% of the rated torque, it is recommended to select the linear V/f pattern (factory default).

■ V/f characteristics

The FRENIC-Mini series of inverters offers a variety of V/f patterns and torque boosts, which include V/f patterns suitable for variable torque load such as general fans and pumps or for special pump load requiring high starting torque. Two types of torque boost are available: manual and automatic.

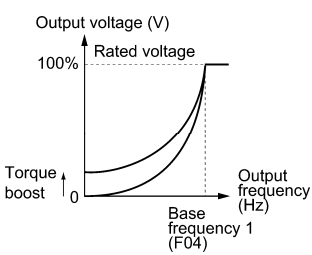

Variable torque V/f pattern (F37 = 0)

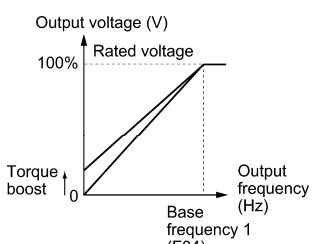

Linear V/f pattern (F37 = 1)

Tip When the variable torque V/f pattern is selected (F37 = 0 or 3), the output voltage may be low and insufficient voltage output may result in less output torque of the motor at a low frequency zone, depending on some characteristics of the motor itself and load. In such a case, it is recommended to increase the output voltage at the low frequency zone using the non-linear V/f pattern (H50, H51).

Recommended value: H50 = 1/10 of the base frequency
H51 = 1/10 of the voltage at base frequency

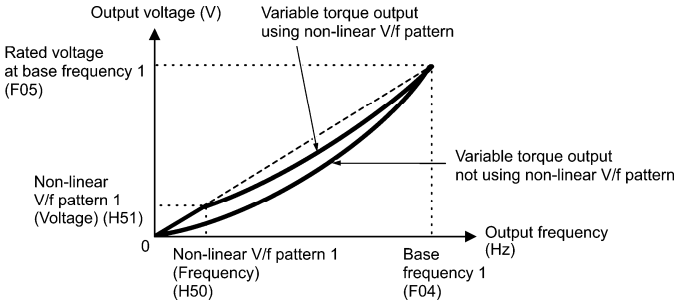

■ Torque boost

• Manual torque boost (F09)

In torque boost using F09, constant voltage is added to the basic V/f pattern, regardless of the load, to give the output voltage. To secure a sufficient starting torque, manually adjust the output voltage to optimally match the motor and its load by using F09. Specify an appropriate level that guarantees smooth start-up and yet does not cause over-excitation with no or light load.

Torque boost per F09 ensures high driving stability since the output voltage remains constant regardless of the load fluctuation.

Specify the F09 data in percentage to the rated voltage at base frequency 1 (F05). At factory shipment, F09 is preset to a level that provides approx. 100% of starting torque.

Note Specifying a high torque boost level will generate a high torque, but may cause overcurrent due to over-excitation at no load. If you continue to drive the motor, it may overheat. To avoid such a situation, adjust torque boost to an appropriate level.

When the non-linear V/f pattern and the torque boost are used together, the torque boost takes effect below the frequency on the non-linear V/f pattern's point.

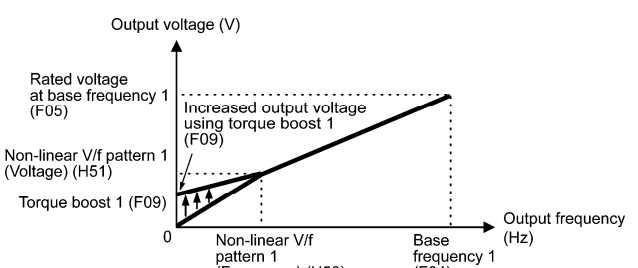

• Auto torque boost

This function automatically optimizes the output voltage to fit the motor with its load. Under light load, auto torque boost decreases the output voltage to prevent the motor from over-excitation. Under heavy load, it increases the output voltage to increase output torque of the motor.

Note

- Since this function relies also on the characteristics of the motor, set the base frequency 1 (F04), the rated voltage at base frequency 1 (F05), and other pertinent motor parameters (P02, P03 and P06 through P99) in line with the motor capacity and characteristics, or else perform auto-tuning (P04).
- When a special motor is driven or the load does not have sufficient rigidity, the maximum torque might decrease or the motor operation might become unstable. In such cases, do not use auto torque boost but choose manual torque boost per F09 (F37 = 0 or 1).

■ Auto energy saving operation

This feature automatically controls the supply voltage to the motor to minimize the total power loss of motor and inverter. (Note that this feature may not be effective depending upon the motor or load characteristics. Check the advantage of energy saving before actually apply this feature to your power system.)

This feature applies to constant speed operation only. During acceleration/deceleration, the inverter will run with manual torque boost (F09) or auto torque boost, depending on the F37 data. If auto energy saving operation is enabled, the response to a change in motor speed may be slow. Do not use this feature for such a system that requires quick acceleration/ deceleration.

Note

- Use auto energy saving only where the base frequency is 60 Hz or lower. If the base frequency is set at 60 Hz or higher, you may get a little or no energy saving advantage. The auto energy saving operation is designed for use with the frequency lower than the base frequency. If the frequency becomes higher than the base frequency, the auto energy saving operation will be invalid.
- Since this function relies also on the characteristics of the motor, set the base frequency 1 (F04), the rated voltage at base frequency 1 (F05), and other pertinent motor parameters (P02, P03 and P06 through P99) in line with the motor capacity and characteristics, or else perform auto-tuning (P04).

F10	Electronic Thermal Overload Protection for Motor 1 (Select motor characteristics)
F11	Electronic Thermal Overload Protection for Motor 1 (Overload detection level)
F12	Electronic Thermal Overload Protection for Motor 1 (Thermal time constant)

F10 through F12 specify the thermal characteristics of the motor for its electronic thermal overload protection that is used to detect overload conditions of the motor.

F10 selects the motor cooling mechanism to specify its characteristics, F11 specifies the overload detection current, and F12 specifies the thermal time constant.

Note

Thermal characteristics of the motor specified by F10 and F12 are also used for the overload early warning. Even if you need only the overload early warning, set these characteristics data to these function codes. To disable the electronic thermal overload protection, set function code F11 to "0.00."

■ Motor characteristics (F10)

F10 selects the cooling mechanism of the motor-- shaft-driven or separately powered cooling fan.

Data for F10	Function
1	For a general-purpose motor and Fuji standard permanent magnet synchronous motor with shaft-driven cooling fan. (The cooling effect will decrease in low frequency operation.)
2	For an inverter-driven motor with separately powered cooling fan. (The cooling effect will be kept constant regardless of the output frequency.)

The figure below shows operating characteristics of the electronic thermal overload protection when F10 = 1. The characteristic factors $\alpha 1$ through $\alpha 3$ as well as their corresponding switching frequencies f_2 and f_3 vary with the characteristics of the motor.

The tables below list the factors determined by the motor capacity (P02) and the motor characteristics (P99).

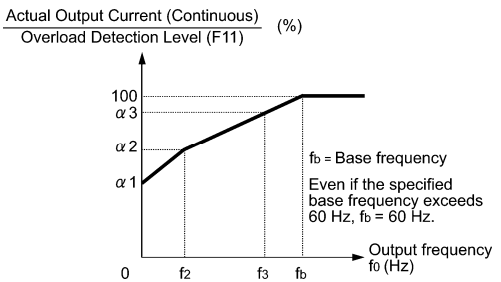

Cooling Characteristics of Motor with Shaft-driven Cooling Fan

Nominal Applied Motor and Characteristic Factors when P99 (Motor 1 selection) = 0 or 4

Nominal applied motor (kW)	Thermal time constant τ (Factory default)	Reference current for setting the thermal time constant (Imax)	Output frequency for motor characteristic factor		Characteristic factor		
			f2	f3	α1	α2	α3
0.1 to 0.75	5 min	Allowable continuous current × 150%	5 Hz	7 Hz	75%	85%	100%
1.5 to 4.0					85%	85%	100%
5.5 to 11				6 Hz	90%	95%	100%
15				7 Hz	85%	85%	100%
18.5, 22				5 Hz	92%	100%	100%
30	10 min		Base frequency × 33%	Base frequency × 33%	54%	85%	90%

Nominal Applied Motor and Characteristic Factors when P99 (Motor 1 Selection) = 1 or 3

Nominal applied motor (kW)	Thermal time constant τ (Factory default)	Reference current for setting the thermal time constant (Imax)	Output frequency for motor characteristic factor		Characteristic factor		
			f2	f3	α1	α2	α3
0.1 to 22	5 min	Allowable continuous current × 150%	Base frequency × 33%	Base frequency × 33%	69%	90%	90%
30	10 min			Base frequency × 83%	54%	85%	95%

When F10 = 2, the cooling effect is not decreased by the output frequency so that the overload detection level is a constant value without reduction (F11).

■ Overload detection level (F11)

F11 specifies the detection level (in amperes) at which the electronic thermal overload protection becomes activated.

In general, set F11 to the rated current of motor when driven at the base frequency (i.e. 1.0 to 1.1 multiple of the rated current of motor 1 (P03)). To disable the electronic thermal overload protection, set F11 to "0.00: Disable."

■ Thermal time constant (F12)

F12 specifies the thermal time constant of the motor. If the current of 150% of the overload detection level specified by F11 flows for the time specified by F12, the electronic thermal overload protection becomes activated to detect the motor overload. The thermal time constant for general-purpose motors including Fuji motors is approx. 5 minutes by factory default.

- Data setting range: 0.5 to 75.0 (minutes) in increments of 0.1 (minute)

(Example) When the F12 data is set at "5.0" (5 minutes)

As shown below, the electronic thermal overload protection is activated to detect an alarm condition (alarm code OL) when the output current of 150% of the overload detection level (specified by F11) flows for 5 minutes, and 120% for approx. 12.5 minutes.

The actual time required for issuing a motor overload alarm tends to be shorter than the specified value, taking into account the time period from when the output current exceeds the allowable continuous drive current (100%) until it reaches 150% of the overload detection level.

Example of Thermal Overload Detection Characteristics

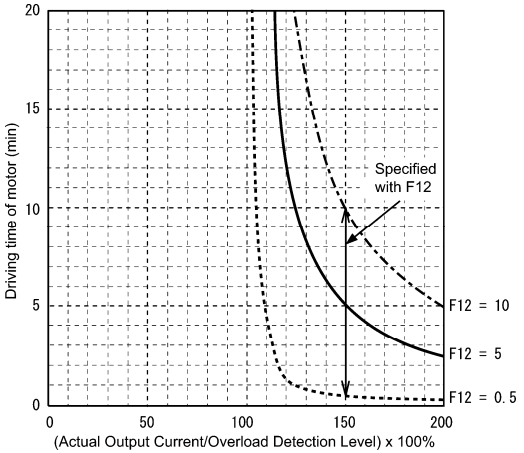

F14	Restart Mode after Momentary Power Failure
H13	Restart Mode after Momentary Power Failure, Restart time
H14	Restart Mode after Momentary Power Failure, Frequency fall rate

F14 specifies the action to be taken by the inverter such as trip and restart in the event of a momentary power failure.

■ Restart mode after momentary power failure (Mode selection) (F14)

Data for F14	Mode	Description
0	Disable restart (Trip immediately)	As soon as the DC link bus voltage drops below the undervoltage detection level due to a momentary power failure, the inverter issues undervoltage alarm LU and shuts down its output so that the motor enters a coast-to-stop state.
1	Disable restart (Trip after recovery from power failure)	As soon as the DC link bus voltage drops below the undervoltage detection level due to a momentary power failure, the inverter shuts down its output so that the motor enters a coast-to-stop state, but it does not enter the undervoltage state or issue undervoltage alarm LU. The moment the power is restored, an undervoltage alarm LU is issued, while the motor remains in a coast-to-stop state.

Data for F14	Mode	Description
2	Trip after decelerate-to-stop	As soon as the DC link bus voltage drops below the continuous running level due to a momentary power failure, decelerate-to-shop control is invoked. Decelerate-to-stop control regenerates kinetic energy from the load's moment of inertia, slowing down the motor and continuing the deceleration operation. After decelerate-to-stop operation, an undervoltage alarm LU is issued. (Available in the ROM version 0500 or later.)
4	Enable restart (Restart at the frequency at which the power failure occurred, for general loads)	As soon as the DC link bus voltage drops below the undervoltage detection level due to a momentary power failure, the inverter saves the output frequency being applied at that time and shuts down the output so that the motor enters a coast-to-stop state. If a run command has been input, restoring power restarts the inverter at the output frequency saved during the last power failure processing. This setting is ideal for applications with a moment of inertia large enough not to slow down the motor quickly, such as fans, even after the motor enters a coast-to-stop state upon occurrence of a momentary power failure.
5	Enable restart (Restart at the starting frequency, for low-inertia load)	After a momentary power failure, restoring power and then entering a run command restarts the inverter at the starting frequency specified by function code F23. This setting is ideal for heavy load applications such as pumps, having a small moment of inertia, in which the motor speed quickly goes down to zero as soon as it enters a coast-to-stop state upon occurrence of a momentary power failure.

⚠ WARNING

If you enable the "Restart mode after momentary power failure" (Function code F14 = 4 or 5), the inverter automatically restarts the motor running when the power is restored. Design the machinery or equipment so that human safety is ensured after restarting.

Otherwise an accident could occur.

■ Restart mode after momentary power failure (Basic operation)

The inverter recognizes a momentary power failure upon detecting the condition that DC link bus voltage goes below the undervoltage detection level, while the inverter is running. If the load of the motor is light and the duration of the momentary power failure is extremely short, the voltage drop may not be great enough for a momentary power failure to be recognized, and the motor may continue to run uninterrupted.

Upon recognizing a momentary power failure, the inverter enters the restart mode (after a recovery from momentary power failure) and prepares for restart. When power is restored, the inverter goes through an initial charging stage and enters the ready-to-run state. When a momentary power failure occurs, the power supply voltage for external circuits such as relay sequence circuits may also drop so as to turn the run command OFF. In consideration of such a situation, the inverter waits 2 seconds for a run command input after the inverter enters a ready-to-run state. If a run command is received within 2 seconds, the inverter begins the restart processing in accordance with the F14 data (Mode selection). If no run command has been received within 2-second wait period, the inverter cancels the restart mode (after a recovery from momentary power failure) and needs to be started again from the ordinary starting frequency. Therefore, ensure that a run command is entered within 2 seconds after a recovery of power, or install a mechanical latch relay.

When run commands are entered via the keypad, the above operation is also necessary for the mode (F02 = 0) in which the rotational direction is determined by the terminal command, ***FWD*** or ***REV***. In the modes where the rotational direction is fixed (F02 = 2 or 3), it is retained inside the inverter so that the restart will begin as soon as the inverter enters the ready-to-run state.

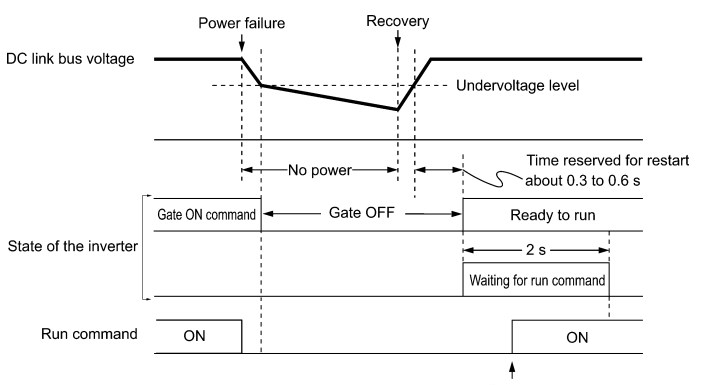

Note If the "Coast to a stop" terminal command ***BX*** is entered during the power failure, the inverter gets out of the restart mode and enters the normal running mode. If a run command is entered with power supply applied, the inverter will start from the normal starting frequency (F23).

During a momentary power failure, the motor slows down. After power is restored, the inverter restarts at the frequency just before the momentary power failure. Then, the current limiting function works and the output frequency of the inverter automatically decreases. When the output frequency matches the motor speed, the motor accelerates up to the original output frequency. See the figure below. In this case, the instantaneous overcurrent limiting must be enabled (H12 = 1).

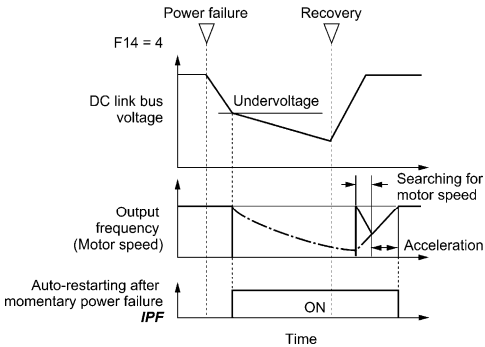

■ Restart mode after momentary power failure (Restart time) (H13)

H13 specifies the time period from momentary power failure occurrence until the inverter reacts for restarting process.

If the inverter starts the motor while motor's residual voltage is still in a high level, a large inrush current may flow or an overvoltage alarm may occur due to an occurrence of temporary regeneration. For safety, therefore, it is advisable to set H13 to a certain level so that restart will take place only after the residual voltage has dropped to a low level. Note that even when power is restored, restart will not take place until the restart time (H13) has elapsed.

Factory default

By factory default, H13 is set at one of the values shown below according to the inverter capacity. Basically, you do not need to change H13 data. However, if the long restart time causes the flow rate of the pump to overly decrease or causes any other problem, you might as well reduce the setting to about a half of the default value. In such a case, make sure that no alarm occurs.

Inverter capacity (kW)	Factory default of H13 (Restart time in seconds)
0.1 to 7.5	0.5
11 to 15	1.0

■ Restart mode after momentary power failure (Frequency fall rate) (H14)

During restart after a momentary power failure, if the inverter output frequency and the idling motor speed cannot be harmonized with each other, an overcurrent will flow, activating the overcurrent limiter. If it happens, the inverter reduces the output frequency to match the idling motor speed according to the reduction rate (Frequency fall rate: Hz/s) specified by H14.

Data for H14	Inverter's action for the output frequency fall
0.00	Follow the selected deceleration time
0.01 to 100.00 (Hz/s)	Follow data specified by H14
999	Follow the setting of the PI processor in the current limiter. (The PI constant is prefixed inside the inverter.)

Note If the frequency fall rate is too high, regeneration may take place at the moment the motor rotation matches the inverter output frequency, causing an overvoltage trip. On the contrary, if the frequency fall rate is too low, the time required for the output frequency to match the motor speed (duration of current limiting action) may be prolonged, triggering the inverter overload prevention control.

F15, F16 Frequency Limiter (High and Low)
H63 Low Limiter (Mode selection)

F15 and F16 specify the upper and lower limits of the output frequency, respectively.

H63 specifies the operation to be carried out when the output frequency drops below the low level specified by F16, as follows:

- When H63 = 0, the output frequency will be held at the low level specified by F16.
- When H63 = 1, the inverter decelerates to stop the motor.

Note
- When you change the frequency limiter (High) (F15) in order to raise the reference frequency, be sure to change the maximum frequency (F03, A01) accordingly.
- Maintain the following relationship among the data for frequency control:

  F15 > F16, F15 > F23(A12), and F15 > F25

  F03/A01 > F16

  where, F23(A12) is of the starting frequency and F25 is of the stop frequency.

  If you specify any wrong data for these function codes, the inverter may not run the motor at the desired speed, or cannot start it normally.

F18	Bias (Frequency command 1)
C50	Bias (for Frequency 1) (Bias base point)
C32, C34	Analog Input Adjustment for [12] (Gain, Gain base point)
C37, C39	Analog Input Adjustment [C1] (Gain, Gain base point)

When any analog input for frequency command 1 (F01) is used, it is possible to define the relationship between the analog input and the reference frequency by multiplying the gain and adding the bias specified by F18.

As shown in the graph below, the relationship between the analog input and the reference frequency specified by frequency command 1 is determined by points "A" and "B." Point "A" is defined by the combination of the bias (F18) and its base point (C50); Point "B," by the combination of the gain (C32, C37) and its base point (C34, C39).

The combination of C32 and C34 applies to terminal [12] and that of C37 and C39, to terminal [C1].

Configure the bias (F18) and gain (C32, C37), assuming the maximum frequency as 100%, and the bias base point (C50) and gain base point (C34, C39), assuming the full scale (10 VDC or 20 mA DC) of analog input as 100%.

Note

- The analog input less than the bias base point (C50) is limited by the bias value (F18).
- Specifying that the data of the bias base point (C50) is equal to or greater than that of each gain base point (C34, C39) will be interpreted as invalid, so the inverter will reset the reference frequency to 0 Hz.

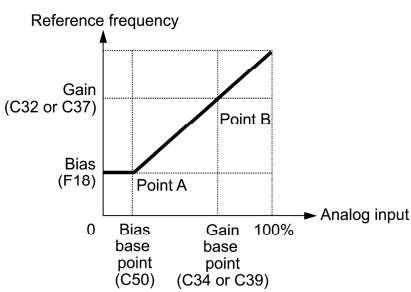

Example: Setting the bias, gain and their base points when the reference frequency 0 to 100% follows the analog input of 1 to 5 VDC to terminal [12] (in frequency command 1).

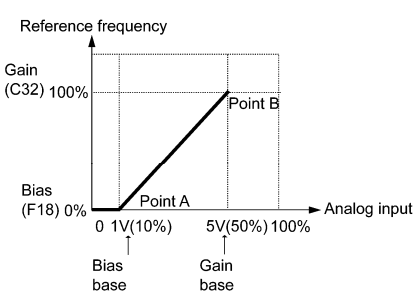

(Point A)

To set the reference frequency to 0 Hz for an analog input being at 1 V, set the bias to 0% (F18 = 0). Since 1 V is the bias base point and it is equal to 10% of 10 V (full scale), set the bias base point to 10% (C50 = 10).

(Point B)

To make the maximum frequency equal to the reference frequency for an analog input being at 5 V, set the gain to 100% (C32 = 100). Since 5 V is the gain base point and it is equal to 50% of 10 V (full scale), set the gain base point to 50% (C34 = 50).

Note The setting procedure for specifying a gain or bias alone without changing any base points is the same as that of Fuji conventional inverters.

F20 to F22 H95 DC Braking 1 (Braking starting frequency, Braking level, and Braking time) DC Braking (Braking response mode)

F20 through F22 specify the DC braking that prevents motor 1 from running by inertia during decelerate-to-stop operation.

If the motor enters a decelerate-to-stop operation by turning OFF the run command or by decreasing the reference frequency below the stop frequency, the inverter activates the DC braking by flowing a current at the braking level (F21) during the braking time (F22) when the output frequency reaches the DC braking starting frequency (F20).

Setting the braking time (F22) to "0.00" disables the DC braking.

■ Braking starting frequency (F20)

F20 specifies the frequency at which the DC braking starts its operation during motor decelerate-to-stop state.

■ Braking level (F21)

F21 specifies the output current level to be applied when the DC braking is activated. The function code data should be set, assuming the rated output current of the inverter as 100%, in increments of 1%.

■ Braking time (F22)

F22 specifies the braking period that activates DC braking.

■ Braking response mode (H95)

H95 specifies the DC braking response mode.

Data for H95	Characteristics	Note
0	Slow response. Slows the rising edge of the current, thereby preventing reverse rotation at the start of DC braking.	Insufficient braking torque may result at the start of DC braking.
1	Quick response. Quickens the rising edge of the current, thereby accelerating the build-up of the braking torque.	Reverse rotation may result depending on the moment of inertia of the mechanical load and the coupling mechanism.

Tip It is also possible to use an external digital input signal as an "Enable DC braking" terminal command ***DCBRK***.

As long as the ***DCBRK*** command is ON, the inverter performs DC braking, regardless of the braking time specified by F22.

Turning the ***DCBRK*** command ON even when the inverter is in a stopped state activates DC braking. This feature allows the motor to be excited before starting, resulting in smoother acceleration (quicker build-up of acceleration torque).

Note In general, specify data of function code F20 at a value close to the rated slip frequency of motor. If you set it at an extremely high value, control may become unstable and an overvoltage alarm may result in some cases.

⚠CAUTION

The DC brake function of the inverter does not provide any holding mechanism.
Injuries could occur.

F23	Starting Frequency 1
F24	Starting Frequency 1 (Holding time)
F25	Stop Frequency
F39	Stop Frequency (Holding time)

At the startup of an inverter, the initial output frequency is equal to the starting frequency 1 specified by F23. The inverter stops its output when the output frequency reaches the stop frequency specified by F25.

Set the starting frequency to a level at which the motor can generate enough torque for startup. Generally, set the motor's rated slip frequency as the starting frequency.

In addition, to compensate for the delay time for the establishment of a magnetic flux in the motor, F24 specifies the holding time for the starting frequency. To stabilize the motor speed at the stop of the motor, F39 specifies the holding time for the stop frequency.

Note If the starting frequency is lower than the stop frequency, the inverter will not output any power as long as the reference frequency does not exceed the stop frequency.

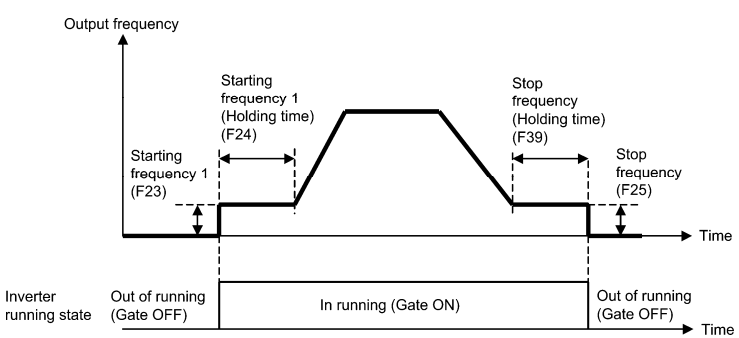

F26, F27 Motor Sound (Carrier frequency and tone)

■ Motor sound (Carrier frequency) (F26)

F26 controls the carrier frequency so as to reduce an audible noise generated by the motor or electromagnetic noise from the inverter itself, and to decrease a leakage current from the main output (secondary) wirings.

Carrier frequency	0.75 to 16 kHz
Motor sound noise emission	High ↔ Low
Motor temperature (due to harmonics components)	High ↔ Low
Ripples in output current waveform	Large ↔ Small
Leakage current	Low ↔ High
Electromagnetic noise emission	Low ↔ High
Inverter loss	Low ↔ High

Note Specifying a too low carrier frequency will cause the output current waveform to have a large amount of ripples. As a result, the motor loss increases, causing the motor temperature to rise. Furthermore, the large amount of ripples tends to cause a current limiting alarm. When the carrier frequency is set to 1 kHz or below, therefore, reduce the load so that the inverter output current comes to be 80% or less of the rated current.

When a high carrier frequency is specified, the temperature of the inverter may rise due to an ambient temperature rise or an increase of the load. If it happens, the inverter automatically decreases the carrier frequency to prevent the inverter overload alarm OLU. With consideration for motor noise, the automatic reduction of carrier frequency can be disabled. Refer to the description of H98.

■ Motor sound (Tone) (F27)

F27 changes the motor running sound tone. This setting is effective when the carrier frequency set to function code F26 is 7 kHz or lower. Changing the tone level may reduce the high and harsh running noise from the motor.

Note If the sound level is set too high, the output current may become unstable, or mechanical vibration and noise may increase. Also, these function codes may not be very effective for certain types of motor.

F30	Analog Output [FMA] (Voltage adjustment)
F31	Analog Output [FMA] (Function)

These function codes allow terminal [FMA] to output monitored data such as the output frequency and the output current in an analog DC voltage. The magnitude of the output voltage is adjustable.

■ Voltage adjustment (F30)

F30 adjusts the output voltage representing the monitored data selected by F31 within the range of 0 to 300%.

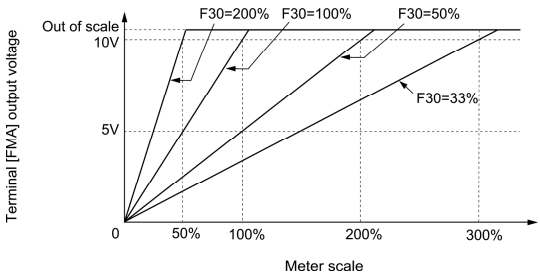

■ Function (F31)

F31 specifies what is output to analog output terminal [FMA].

Data for F31	[FM] output	Function (Monitor the following)	Meter scale (Full scale at 100%)
0	Output frequency (before slip compensation)	Output frequency of the inverter (Equivalent to the motor synchronous speed)	Maximum frequency (F03, A01)
1	Output frequency (after slip compensation)	Output frequency of the inverter	Maximum frequency (F03, A01)
2	Output current	Output current (RMS) of the inverter	Twice the inverter rated current
3	Output voltage	Output voltage (RMS) of the inverter	250 V for 200 V class series, 500 V for 400 V class series
6	Input power	Input power of the inverter	Twice the rated output of the inverter
7	PID feedback amount	Feedback amount under PID control	100% of the feedback amount
9	DC link bus voltage	DC link bus voltage of the inverter	500 V for 200 V class series, 1000 V for 400 V class series
14	Calibration	Full scale output of the meter calibration	This always outputs +10 VDC (FMA function).
15	PID command (SV)	Command value under PID control	100% of the PID command value
16	PID output (MV)	Output level of the PID controller under PID control (Frequency command)	Maximum frequency (F03, A01)

F42 Control Mode Selection 1

F42 specifies the control mode of the inverter to control a motor.

Data for F42	Control mode
0	V/f control with slip compensation inactive
1	Dynamic torque vector control
2	V/f control with slip compensation active
11	V/f control for PMSM drive

■ V/f control

In this control, the inverter controls a motor by the voltage and frequency according to the V/f pattern specified by function codes.

■ Slip compensation

Applying any load to an induction motor causes a rotational slip due to the motor characteristics, decreasing the motor rotation. The inverter's slip compensation facility first presumes the slip value of the motor based on the motor torque generated and raises the output frequency to compensate for the decrease in motor rotation. This prevents the motor from decreasing the rotation due to the slip.

That is, this facility is effective for improving the motor speed control accuracy.

The compensation value is specified by combination of function codes P12 (Rated slip frequency), P09 (Slip compensation gain for driving)) and P11 (Slip compensation gain for braking).

■ Dynamic torque vector control

To get the maximal torque out of a motor, this control calculates the motor torque for the load applied and uses it to optimize the voltage and current vector output.

Selecting this control automatically enables the auto torque boost and slip compensation function and disables auto energy saving operation.

This control is effective for improving the system response against external disturbances and the motor speed control accuracy.

■ V/f control for PMSM drive

Under this control, the inverter drives a permanent magnet synchronous motor (PMSM). Refer to Section 5.3 "Notes in Driving PMSM" for details.

F43, F44 Current Limiter (Mode selection, Level)

When the output current of the inverter exceeds the level specified by the current limiter (F44), the inverter automatically manages its output frequency to prevent a stall and limit the output current. (Refer to the description of function code H12.)

If F43 = 1, the current limiter is enabled only during constant speed operation. If F43 = 2, the current limiter is enabled during both of acceleration and constant speed operation. Choose F43 = 1 if you need to run the inverter at full capability during acceleration and to limit the output current during constant speed operation.

■ Mode selection (F43)

F43 selects the motor running state in which the current limiter will be active.

Data for F43	Running states that enable the current limiter		
	During acceleration	During constant speed	During deceleration
0	Disable	Disable	Disable
1	Disable	Enable	Disable
2	Enable	Enable	Disable

■ Level (F44)

F44 specifies the operation level at which the output current limiter becomes activated, in ratio to the inverter rating.

Note

- Since the current limit operation with F43 and F44 is performed by software, it may cause a delay in control. If you need a quick response, specify a current limit operation by hardware (H12 = 1) at the same time.
- If an excessive load is applied when the current limiter operation level is set extremely low, the inverter will rapidly lower its output frequency. This may cause an overvoltage trip or dangerous turnover of the motor rotation due to undershooting.

F50, F51 Electronic Thermal Overload Protection for Braking Resistor (Discharging capability and Allowable average loss)

A braking resistor can be mounted on inverters of 0.4 kW or above.

These function codes specify the electronic thermal overload protection feature for the braking resistor.

Set F50 and F51 data to the discharging capability and allowable average loss, respectively. Since those values differ depending on the specifications of the braking resistor, refer to the tables given below or calculate them according to the expressions given in the FRENIC-Mini User's Manual (24A7-E-0023), Chapter 9 "FUNCTION CODES."

Note Depending on the thermal marginal characteristics of the braking resistor, the electronic thermal overload protection feature may act so that the inverter issues the overheat protection alarm dbH even if the actual temperature rise is not enough. If it happens, review the relationship between the performance index of the braking resistor and settings of related function codes.

The tables below list the discharging capability and allowable average loss of the braking resistor. These values depend upon the inverter and braking resistor models.

■ External Braking Resistors

Standard models

The thermal sensor relay mounted on the braking resistor acts as a thermal protector of the motor for overheat, so assign an "Enable external alarm trip" terminal command ***THR*** to any of digital input terminals [X1] to [X3], [FWD] and [REV] and connect that terminal and its common terminal to braking resistor's terminals 2 and 1.

To protect the motor from overheat without using the thermal sensor relay mounted on the braking resistor, configure the electronic thermal overload protection facility by setting F50 and F51 data to the discharging capability and allowable average loss values listed below, respectively.

Power supply voltage	Inverter type	Braking resistor		Resistance (Ω)	Continuous braking (100% braking torque)		Intermittent braking (Period: 100 s or less)	
		Type	Qty.		Discharging capability (kWs)	Braking time (s)	Allowable average loss (kW)	Duty (%ED)
Three-phase 200 V	FRN0004C2S-2☐	DB0.75-2	1	100	9	45	0.044	22
	FRN0006C2S-2☐				17		0.068	18
	FRN0010C2S-2☐	DB2.2-2		40	34		0.075	10
	FRN0012C2S-2☐				33	30	0.077	7
	FRN0020C2S-2☐	DB3.7-2		33	37	20	0.093	5
Three-phase 400 V	FRN0002C2S-4☐	DB0.75-4		200	9	45	0.044	22
	FRN0004C2S-4☐				17		0.068	18
	FRN0005C2S-4☐	DB2.2-4		160	34		0.075	10
	FRN0007C2S-4☐				33	30	0.077	7
	FRN0011C2S-4☐	DB3.7-4		130	37	20	0.093	5
Single-phase 200 V	FRN0004C2S-7☐	DB0.75-2		100	9	45	0.044	22
	FRN0006C2S-7☐				17		0.068	18
	FRN0010C2S-7☐	DB2.2-2		40	34		0.075	10
	FRN0012C2S-7☐				33	30	0.077	7

Note: A box (☐) in the above table replaces A, C, E, or U depending on the shipping destination. For three-phase 200 V class series of inverters, it replaces A or U.

Compact models

When using the compact models of braking resistor TK80W120Ω or TK80W100Ω, set F50 to "7" and F51 to "0.033."

10% ED models

Power supply voltage	Inverter type	Braking resistor		Resistance (Ω)	Continuous braking (100% braking torque)		Intermittent braking (Period: 100 s or less)	
		Type	Qty.		Discharging capacity (kWs)	Braking time (s)	Allowable average loss (kW)	Duty (%ED)
Three-phase 200 V	FRN0004C2S-2☐	DB0.75-2C	1	100	50	250	0.075	37
	FRN0006C2S-2☐					133		20
	FRN0010C2S-2☐	DB2.2-2C		40	55	73	0.110	14
	FRN0012C2S-2☐					50		10
	FRN0020C2S-2☐	DB3.7-2C		33	140	75	0.185	
Three-phase 400 V	FRN0002C2S-4☐	DB0.75-4C		200	50	250	0.075	37
	FRN0004C2S-4☐					133		20
	FRN0005C2S-4☐	DB2.2-4C		160	55	73	0.110	14
	FRN0007C2S-4☐					50		10
	FRN0011C2S-4☐	DB3.7-4C		130	140	75	0.185	
Single-phase 200 V	FRN0004C2S-7☐	DB0.75-2C		100	50	250	0.075	37
	FRN0006C2S-7☐					133		20
	FRN0010C2S-7☐	DB2.2-2C		40	55	73	0.110	14
	FRN0012C2S-7☐					50		10

Note: A box (☐) in the above table replaces A, C, E, or U depending on the shipping destination. For three-phase 200 V class series of inverters, it replaces A or U.

E01 to E03, E98, E99 Terminal [X1] to [X3] Function / Terminal [FWD] and [REV] Function

Function codes E01 to E03, E98 and E99 allow you to assign commands to terminals [X1] to [X3], [FWD], and [REV] which are general-purpose, programmable, digital input terminals.

These function codes may also switch the logic system between normal and negative to define how the inverter logic interprets either ON or OFF status of each terminal. The default setting is normal logic system "Active ON." So, explanations that follow are given in normal logic system "Active ON."

⚠CAUTION

In the case of digital input, you can assign commands to the switching means for the run command and its operation and the reference frequency (e.g., ***SS1***, ***SS2***, ***SS4***, ***SS8***, ***Hz2/Hz1***, ***Hz/PID***, ***IVS***, and ***LE***). Be aware that switching any of such signals may cause a sudden start (running) or an abrupt change in speed.

An accident or physical injury may result.

Function code data		Terminal commands assigned	Symbol
Active ON	Active OFF		
0	1000	Select multistep frequency (0 to 15 steps)	***SS1***
1	1001		***SS2***
2	1002		***SS4***
3	1003		***SS8***
4	1004	Select ACC/DEC time	***RT1***
6	1006	Enable 3-wire operation	***HLD***
7	1007	Coast to a stop	***BX***
8	1008	Reset alarm	***RST***
1009	9	Enable external alarm trip	***THR***
10	1010	Ready for jogging	***JOG***
11	1011	Select frequency command 2/1	***Hz2/Hz1***
12	1012	Select motor 2 / motor 1	***M2/M1***
13	—	Enable DC braking	***DCBRK***
17	1017	UP (Increase output frequency)	***UP***
18	1018	DOWN (Decrease output frequency)	***DOWN***
19	1019	Enable data change with keypad	***WE-KP***
20	1020	Cancel PID control	***Hz/PID***
21	1021	Switch normal/inverse operation	***IVS***
24	1024	Enable communications link via RS-485	***LE***
33	1033	Reset PID integral and differential components	***PID-RST***
34	1034	Hold PID integral component	***PID-HLD***
98	—	Run forward (Exclusively assigned to [FWD] and [REV] terminals by E98 and E99)	***FWD***
99	—	Run reverse (Exclusively assigned to [FWD] and [REV] terminals by E98 and E99)	***REV***

Note Any negative logic (Active OFF) command cannot be assigned to the functions marked with "—" in the "Active OFF" column.

The "Enable external alarm trip" and "Force to stop" are fail-safe terminal commands. For example, when data = 9 in "Enable external alarm trip," "Active OFF" (alarm is triggered when OFF); when data = 1009, "Active ON" (alarm is triggered when ON).

Terminal function assignment and data setting

■ Select multistep frequency (0 to 15 steps) -- ***SS1***, ***SS2***, ***SS4***, and ***SS8***
(Function code data = 0, 1, 2, and 3)

The combination of the ON/OFF states of digital input signals ***SS1***, ***SS2***, ***SS4*** and ***SS8*** selects one of 16 different frequency commands defined beforehand by 15 function codes C05 to C19 (Multistep frequency 0 to 15). With this, the inverter can drive the motor at 16 different preset frequencies.

The table below lists the frequencies that can be obtained by the combination of switching ***SS1***, ***SS2***, ***SS4*** and ***SS8***. In the "Selected frequency" column, "Other than multistep frequency" represents the reference frequency sourced by frequency command 1 (F01), frequency command 2 (C30), or others.

SS8	***SS4***	***SS2***	***SS1***	Selected frequency
OFF	OFF	OFF	OFF	Other than multistep frequency
OFF	OFF	OFF	ON	C05 (Multistep frequency 1)
OFF	OFF	ON	OFF	C06 (Multistep frequency 2)
OFF	OFF	ON	ON	C07 (Multistep frequency 3)
OFF	ON	OFF	OFF	C08 (Multistep frequency 4)
OFF	ON	OFF	ON	C09 (Multistep frequency 5)
OFF	ON	ON	OFF	C10 (Multistep frequency 6)
OFF	ON	ON	ON	C11 (Multistep frequency 7)
ON	OFF	OFF	OFF	C12 (Multistep frequency 8)
ON	OFF	OFF	ON	C13 (Multistep frequency 9)
ON	OFF	ON	OFF	C14 (Multistep frequency 10)
ON	OFF	ON	ON	C15 (Multistep frequency 11)
ON	ON	OFF	OFF	C16 (Multistep frequency 12)
ON	ON	OFF	ON	C17 (Multistep frequency 13)
ON	ON	ON	OFF	C18 (Multistep frequency 14)
ON	ON	ON	ON	C19 (Multistep frequency 15)

■ Select ACC/DEC time -- ***RT1*** (Function code data = 4)

This terminal command switches between ACC/DEC time 1 (F07, F08) and ACC/DEC time 2 (E10, E11).

If no ***RT1*** command is assigned, ACC/DEC time 1 (F07, F08) takes effect by default.

Input terminal command ***RT1***	Acceleration/deceleration time
OFF	Acceleration/deceleration time 1 (F07, F08)
ON	Acceleration/deceleration time 2 (E10, E11)

■ Enable 3-wire operation -- ***HLD*** (Function code data = 6)

Turning this terminal command ON self-holds the forward ***FWD*** or reverse ***REV*** run command issued with it, to enable 3-wire inverter operation.

Short-circuiting the terminals between ***HLD*** and [CM] (i.e., when ***HLD*** is ON) self-holds the first ***FWD*** or ***REV*** command at its leading edge. Turning ***HLD*** OFF releases the self-holding.

When ***HLD*** is not assigned, 2-wire operation involving only ***FWD*** and ***REV*** takes effect.

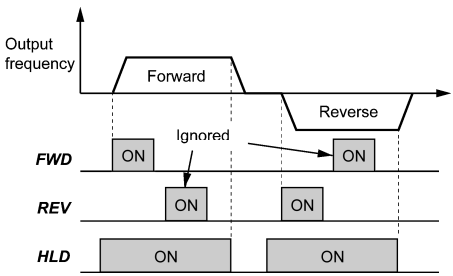

■ Coast to a stop -- ***BX*** (Function code data = 7)

Turning this terminal command ON immediately shuts down the inverter output so that the motor coasts to a stop without issuing any alarms.

■ Reset alarm -- ***RST*** (Function code data = 8)

Turning this terminal command ON clears the ***ALM*** state--alarm output (for any fault). Turning it OFF erases the alarm display and clears the alarm hold state.

When you turn the ***RST*** command ON, keep it ON for 10 ms or more. This command should be kept OFF for the normal inverter operation.

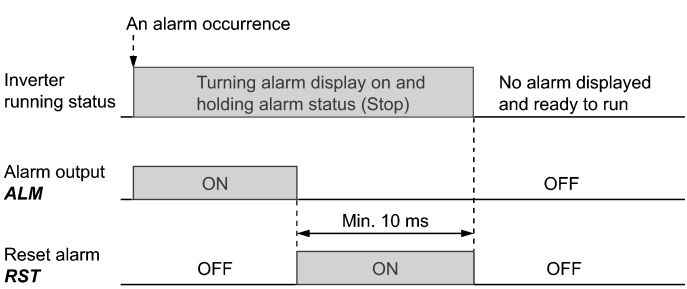

■ Enable external alarm trip -- ***THR*** (Function code data = 9)

Turning this terminal command OFF immediately shuts down the inverter output (so that the motor coasts to a stop), displays the alarm OH2, and outputs the alarm relay (for any fault) ***ALM***. The ***THR*** command is self-held, and is reset when an alarm reset takes place.

Tip Use this alarm trip command from external equipment when you have to immediately shut down the inverter output in the event of an abnormal situation in a peripheral equipment.

■ Ready for jogging -- ***JOG*** (Function code data = 10)

This terminal command is used to jog or inch the motor for positioning a work piece.

Turning this command ON makes the inverter ready for jogging.

Simultaneous keying (STOP) + (∧) keys on the keypad is functionally equivalent to this command; however, it is restricted by the run command source as listed below.

When the run command source is the keypad (F02 = 0, 2 or 3):

Input terminal command ***JOG***	(STOP) + (∧) keys on the keypad	Inverter running state
ON	—	Ready for jogging
OFF	Pressing these keys toggles between the "normal operation" and "ready for jogging."	Normal operation
		Ready for jogging

When the run command source is digital input (F02 = 1):

Input terminal command ***JOG***	(STOP) + (∧) keys on the keypad	Inverter running state
ON	Disable	Ready for jogging
OFF		Normal operation

Jogging operation

Pressing the (RUN) key or turning the ***FWD*** or ***REV*** terminal command ON starts jogging.

For the jogging by the keypad, the inverter jogs only when the (RUN) key is held down. Releasing the (RUN) key decelerates to stop.

During jogging, the frequency specified by C20 (Jogging Frequency) and the acceleration/deceleration time specified by H54 (ACC/DEC Time) apply.

Note

- The inverter's status transition between "ready for jogging" and "normal operation" is possible only when the inverter is stopped.
- To start jogging operation by simultaneously entering the ***JOG*** terminal command and a run command (e.g., ***FWD***), the input delay time between the two commands should be within 100 ms. If a run command ***FWD*** is entered first, the inverter does not jog the motor but runs it ordinarily until the next input of the ***JOG***.

■ Select frequency command 2/1 -- ***Hz2/Hz1*** (Function code data = 11)

Turning this terminal command ON and OFF switches the frequency command source between frequency command 1 (F01) and frequency command 2 (C30).

If no ***Hz2/Hz1*** terminal command is assigned, the frequency sourced by F01 takes effect by default.

Input terminal command ***Hz2/Hz1***	Frequency command source
OFF	Follow F01 (Frequency command 1)
ON	Follow C30 (Frequency command 2)

■ Select motor 2 / motor 1 -- ***M2*/*M1*** (Function code data = 12)

Turning this terminal command ON switches from motor 1 to motor 2. Switching is possible only when the inverter is stopped. Upon completion of switching, the digital terminal output "Switched to motor 2" ***SWM2*** (assigned to any of terminals [Y1] and [30A/B/C]) turns ON.

If no ***M2/M1*** terminal command is assigned, motor 1 is selected by default.

Input terminal command ***M2*/*M1***	Selected motor	***SWM2*** status after completion of switching
OFF	Motor 1	OFF
ON	Motor 2	ON

Switching between motors 1 and 2 automatically switches applicable function codes as listed below. The inverter runs the motor with those codes that should be properly configured.

Function code name		For Motor 1	For Motor 2
Maximum Frequency		F03	A01
Base Frequency		F04	A02
Rated voltage at Base Frequency		F05	A03
Maximum Output Voltage		F06	A04
Torque Boost		F09	A05
Electronic Thermal Overload Protection for Motor	(Select motor characteristics)	F10	A06
	(Overload detection level)	F11	A07
	(Thermal time constant)	F12	A08
DC Braking	(Braking starting frequency)	F20	A09
	(Braking level)	F21	A10
	(Braking time)	F22	A11
Starting Frequency		F23	A12
Load Selection/Auto Torque Boost/Auto Energy Saving Operation		F37	A13
Control Mode Selection		F42	A14
Motor Parameters	(No. of poles)	P02	A16
	(Rated current)	P03	A17
	(Auto-tuning)	P04	A18
	(No-load current)	P06	A20
	(%R1)	P07	A21
	(%X)	P08	A22
	(Slip compensation gain for driving)	P09	A23
	(Slip compensation response time)	P10	A24
	(Slip compensation gain for braking)	P11	A25
	(Rated slip frequency)	P12	A26
Motor Selection		P99	A39
Output Current Fluctuation Damping Gain for Motor		H80	A41
Cumulative Motor Run Time		H94	A51
Startup Counter of Motor		H44	A52

Motor 2 imposes functional restrictions on the following function codes. Confirm the settings of those function codes before use.

Functions	Restrictions	Related function codes
Non-linear V/f pattern	Disabled. Linear V/f pattern only	H50 to H53
Starting frequency	Starting frequency holding time not supported.	F24
Stop frequency	Stop frequency holding time not supported.	F39
Overload early warning	Disabled.	E34 and E35
UP*/*DOWN control	Disabled. Fixed at default setting 0.	H61
PID control	Disabled.	J01
Braking signal	Disabled.	J68 to J72
Software current limiter	Disabled.	F43 and F44
Rotation direction limitation	Disabled.	H08

Note To run the 2nd motor with the ***M2/M1*** terminal command and a run command (e.g., ***FWD***), the input of the ***M2/M1*** should not be delayed 10 ms or more from that of the run command. If the delay exceeds 10 ms, the 1st motor will be driven by default.

■ Enable DC braking -- ***DCBRK*** (Function code data = 13)

This terminal command gives the inverter a DC braking command through the inverter's digital input.

(Refer to the descriptions of F20 to F22.)

■ UP (Increase output frequency) and DOWN (Decrease output frequency) commands -- ***UP*** and ***DOWN*** (Function code data = 17, 18)

• Frequency setting

When the ***UP*/*DOWN*** control is selected for frequency setting with a run command ON, turning the ***UP*** or ***DOWN*** terminal command ON causes the output frequency to increase or decrease, respectively, within the range from 0 Hz to the maximum frequency as listed below.

UP Data = 17	***DOWN*** Data = 18	Function
OFF	OFF	Keep the current output frequency.
ON	OFF	Increase the output frequency with the acceleration time currently specified.
OFF	ON	Decrease the output frequency with the deceleration time currently specified.
ON	ON	Keep the current output frequency.

The ***UP***/***DOWN*** control is available in two modes--one mode (H61 = 0) in which the initial value of the reference frequency is fixed to "0.00" at the start of the ***UP***/***DOWN*** control and the other mode (H61 = 1) in which the reference frequency applied in the previous ***UP***/***DOWN*** control applies as the initial value.

When H61 = 0, the reference frequency applied by the previous ***UP***/***DOWN*** control has been cleared to "0," so at the next restart (including powering on), use the ***UP*** terminal command to accelerate the speed as needed.

When H61 = 1, the inverter internally holds the current output frequency set by the ***UP***/***DOWN*** control and applies the held frequency at the next restart (including powering on).

Note At the time of restart, if an ***UP*** or ***DOWN*** terminal command is entered before the internal frequency reaches the output frequency saved in the memory, the inverter saves the current output frequency into the memory and starts the ***UP***/***DOWN*** control with the new frequency. The previous frequency held will be overwritten by the current one.

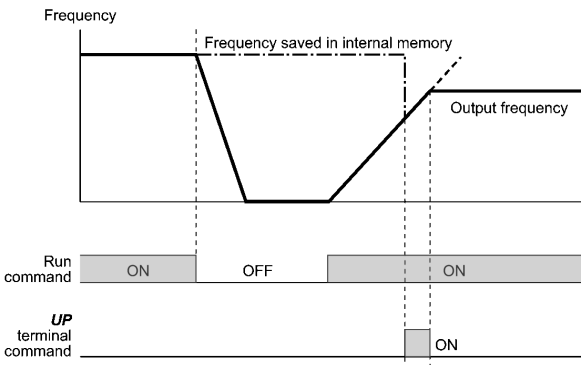

Initial frequency for the ***UP***/***DOWN*** control when the frequency command source is switched

When the frequency command source is switched to the ***UP***/***DOWN*** control from other sources, the initial frequency for the ***UP***/***DOWN*** control is as listed below:

Frequency command source	Switching command	Initial frequency for ***UP***/***DOWN*** control	
		H61 = 0	H61 = 1
Other than ***UP***/***DOWN*** (F01, C30)	Select frequency command 2/1 (***Hz2***/***Hz1***)	Reference frequency given by the frequency command source used just before switching	
PID conditioner	Cancel PID control (***Hz***/***PID***)	Reference frequency given by PID control (PID controller output)	
Multistep frequency	Select multistep frequency (***SS1***, ***SS2***, ***SS4*** and ***SS8***)	Reference frequency given by the frequency command source used just before switching	Reference frequency at the time of previous UP/DOWN control
Communications link	Enable communications link via RS-485 (***LE***)		

Note To enable the ***UP*** and ***DOWN*** terminal commands, you need to set frequency command 1 (F01) or frequency command 2 (C30) to "7" beforehand.

■ Enable communications link via RS-485 -- ***LE***
(Function code data = 24)

Turning this terminal command ON assigns priorities to frequency commands or run commands received via the RS-485 communications link (H30).

No ***LE*** assignment is functionally equivalent to the ***LE*** being ON. (Refer to the description of H30.)

■ Run forward -- ***FWD*** (Function code data = 98)

Turning this terminal command ON runs the motor in the forward direction; turning it OFF decelerates it to stop.

📖 This terminal command can be assigned only by E98 or E99.

■ Run reverse -- ***REV*** (Function code data = 99)

Turning this terminal command ON runs the motor in the reverse direction; turning it OFF decelerates it to stop.

📖 This terminal command can be assigned only by E98 or E99.

E20 Terminal [Y1] Function
E27 Terminal [30A/B/C] Function (Relay output)

E20 and E27 assign output signals (listed on the next page) to general-purpose, programmable output terminals [Y1] and [30A/B/C]. These function codes can also switch the logic system between normal and negative to define the property of those output terminals so that the inverter logic can interpret either the ON or OFF status of each terminal as active. The factory default settings are "Active ON."

Terminal [Y1] is a transistor output and terminals [30A/B/C] are relay contact outputs. In normal logic, if an alarm occurs, the relay will be energized so that [30A] and [30C] will be closed, and [30B] and [30C] opened. In negative logic, the relay will be deenergized so that [30A] and [30C] will be opened, and [30B] and [30C] closed. This may be useful for the implementation of failsafe power systems.

Note

- When a negative logic is employed, all output signals are active (e.g. an alarm would be recognized) while the inverter is powered OFF. To avoid causing system malfunctions by this, interlock these signals to keep them ON using an external power supply. Furthermore, the validity of these output signals is not guaranteed for approximately 1.5 seconds after power-on, so introduce such a mechanism that masks them during the transient period.
- Terminals [30A/B/C] use mechanical contacts that cannot stand frequent ON/OFF switching. Where frequent ON/OFF switching is anticipated (for example, limiting a current by using signals subjected to inverter output limit control such as switching to commercial power line), use transistor output [Y1] instead. The service life of a relay is approximately 200,000 times if it is switched ON and OFF at one-second intervals.

The table below lists functions that can be assigned to terminals [Y1] and [30A/B/C].

To make the explanations simpler, the examples shown below are all written for the normal logic (Active ON).

Function code data		Functions assigned	Symbol
Active ON	Active OFF		
0	1000	Inverter running	***RUN***
1	1001	Frequency arrival signal	***FAR***
2	1002	Frequency detected	***FDT***
3	1003	Undervoltage detected (Inverter stopped)	***LU***
5	1005	Inverter output limiting	***IOL***
6	1006	Auto-restarting after momentary power failure	***IPF***
7	1007	Motor overload early warning	***OL***
26	1026	Auto-resetting	***TRY***
30	1030	Service lifetime alarm	***LIFE***
35	1035	Inverter running 2	***RUN2***
36	1036	Overload prevention control	***OLP***
37	1037	Current detected	***ID***
38	1038	Current detected 2	***ID2***
41	1041	Low current detected	***IDL***
43	1043	Under PID control	***PID-CTL***
44	1044	Motor stopped due to slow flowrate under PID control	***PID-STP***
49	1049	Switched to motor 2	***SWM2***
56	1056	Motor overheat detected by thermistor (PTC)	***THM***
57	1057	Brake signal	***BRKS***
59	1059	Terminal [C1] wire break	***C1OFF***
84	1084	Maintenance timer	***MNT***
87	1087	Frequency arrival detected	***FARFDT***
99	1099	Alarm output (for any alarm)	***ALM***

■ Inverter running -- ***RUN*** (Function code data = 0)

This output signal tells the external equipment that the inverter is running at a starting frequency or higher. It comes ON when the output frequency exceeds the starting frequency, and it goes OFF when it is less than the stop frequency. It is also OFF when the DC braking is in operation.

If this signal is assigned in negative logic (Active OFF), it can be used as a signal indicating "Inverter being stopped."

■ Frequency arrival signal -- ***FAR*** (Function code data = 1)

This output signal comes ON when the difference between the output frequency and reference frequency comes within the frequency arrival hysteresis width specified by E30. (Refer to the description of E30.)

■ Frequency detected -- ***FDT*** (Function code data = 2)

This output signal comes ON when the output frequency exceeds the frequency detection level specified by E31, and it goes OFF when the output frequency drops below the "Frequency detection level (E31) - Hysteresis width (E32)."

■ Undervoltage detected -- ***LU*** (Function code data = 3)

This output signal comes ON when the DC link bus voltage of the inverter drops below the specified undervoltage level, and it goes OFF when the voltage exceeds the level.

This signal is ON also when the undervoltage protective function is activated so that the motor is in an abnormal stop state (e.g., tripped).

When this signal is ON, a run command is disabled if given.

■ Inverter output limiting -- ***IOL*** (Function code data = 5)

This output signal comes ON when the inverter is limiting the output frequency by activating any of the following actions (minimum width of the output signal: 100 ms).

- Current limiting by software (F43 and F44)
- Instantaneous overcurrent limiting by hardware (H12 = 1)
- Automatic deceleration (Anti-regenerative control) (H69 = 2 or 4)

Note When the ***IOL*** signal is ON, the output frequency may have deviated from the specified frequency because of the limiting function above.

■ Auto-restarting after momentary power failure -- ***IPF*** (Function code data = 6)

This output signal is ON either during continuous running after a momentary power failure or during the period from when the inverter has detected an undervoltage condition and shut down the output until restart has been completed (the output has reached the reference frequency).

To enable this ***IPF*** signal, set F14 (Restart mode after momentary power failure) to "4" (Enable restart (Restart at the frequency at which the power failure occurred)) or "5" (Enable restart (Restart at the starting frequency)) beforehand.

■ Motor overload early warning -- ***OL*** (Function code data = 7)

This output signal is used to issue a motor overload early warning that enables you to take an corrective action before the inverter detects a motor overload alarm and shuts down its output. (Refer to the description of E34.)

■ Service lifetime alarm -- ***LIFE*** (Function code data = 30)

This output signal comes ON when it is judged that the service life of any one of capacitors (DC link bus capacitors and electrolytic capacitors on the printed circuit board) and cooling fan has expired.

This signal should be used as a guide for replacement of the capacitors and cooling fan. If this signal comes ON, use the specified maintenance procedure to check the service life of these parts and determine whether the parts should be replaced or not.

For details about the judgment on service life, refer to Table 7.3 "Criteria for Issuing a Lifetime Alarm" in Chapter 7, Section 7.3 "List of Periodical Replacement Parts."

■ Inverter running 2 -- ***RUN2*** (Function code data = 35)

This signal acts in the same way as ***RUN*** (Function code data = 0) except that ***RUN2*** is ON even when the DC braking is in operation.

■ Overload prevention control -- ***OLP*** (Function code data = 36)

This output signal comes ON when the overload prevention control is activated. The minimum ON-duration is 100 ms. (Refer to the description of H70.)

■ Current detected and Current detected 2 -- ***ID*** and ***ID2*** (Function code data = 37, 38)

The ***ID*** or ***ID2*** output signal comes ON when the output current of the inverter exceeds the level specified by E34 (Current detection (Level)) or E37 (Current detection 2 (Level)) for the time longer than the one specified by E35 (Current detection (Timer)) or E38 (Current detection 2 (Timer)), respectively. The minimum ON-duration is 100 ms.

The ***ID*** or ***ID2*** goes OFF when the output current drops below 90% of the rated operation level.

These two output signals can be assigned to two different digital output terminals independently if necessary.

Note Function code E34 is effective for not only the motor overload early warning ***OL***, but also for the operation level of the current detection ***ID***. (Refer to the description of E34.)

■ Low current detected -- ***IDL*** (Function code data = 41)

This output signal comes ON when the inverter output current drops below the low current detection level (E34) and it remains at the low level for the timer period (E35). When the output current exceeds the current detection level (E37) by 5% or more of the inverter rated current, this signal goes OFF. The minimum ON-duration is 100 ms. (Refer to the description of E34.)

■ Under PID control -- ***PID-CTL*** (Function code data = 43)

This output signal comes ON when PID control is enabled ("Cancel PID control" (***Hz/PID***) = OFF) and a run command is ON. (Refer to the description of J01.)

■ Motor stopped due to slow flowrate under PID control -- ***PID-STP*** (Function code data = 44)

This output signal comes ON when the inverter is stopped by the slow flowrate stop function under PID control. (Refer to the descriptions of J15 through J17.)

Note When PID control is enabled, the inverter may stop due to the slow flowrate stop function or other reasons, with the ***PID-CTL*** signal being ON. As long as the ***PID-CTL*** signal is ON, PID control is effective, so the inverter may abruptly resume its operation, depending on the PID feedback value.

⚠WARNING

When PID control is enabled, even if the inverter stops its output during operation because of sensor signals or other reasons, operation will resume automatically.

Design your machinery so that safety is ensured even in such cases.

Otherwise, an accident could occur.

■ Switched to motor 2 -- ***SWM2*** (Function code data = 49)

This output signal comes ON when motor 2 is selected with the ***M2/M1*** terminal command assigned to a digital input terminal. For details, refer to the descriptions of E01 through E03 (Function code data = 12).

■ Motor overheat detected by thermistor (PTC) -- ***THM*** (Function code data = 56)

When the thermistor is enabled (H26 = 2), this output signal comes ON if the motor temperature rises to the protection trigger level specified by H27.

■ Brake signal -- ***BRKS*** (Function code data = 57)

This signal outputs a brake control command that releases or activates the brake.

■ Terminal [C1] wire break -- ***C1OFF*** (Function code data = 59)

When terminal [C1] is used for a feedback signal under PID control, this output signal comes ON if the [C1] wire breaks, thereby enabling it to activate the protection function.

■ Frequency arrival detected -- ***FARFDT*** (Function code data = 87)

The ***FARFDT***, which is an ANDed signal of ***FAR*** and ***FDT***, comes ON when both signal conditions are met.

■ Alarm output (for any alarm) -- ***ALM*** (Function code data = 99)

This output signal comes ON if any of the protective functions is activated and the inverter enters Alarm mode.

E30 Frequency Arrival (Hysteresis width for ***FAR***)

E30 specifies the detection level (hysteresis width) for ***FAR*** ("Frequency arrival signal").

The moment the output frequency reaches the zone defined by "Reference frequency ± Hysteresis width specified by E30," the ***FAR*** comes ON.

The operation timings of signals are shown in the graph below.

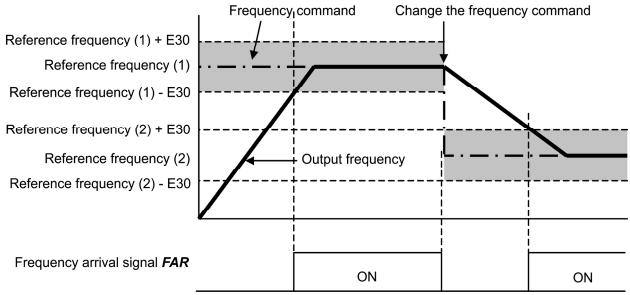

These function codes define the detection level and timer for the ***OL*** ("Motor overload early warning"), ***ID*** ("Current detected"), ***ID2*** ("Current detected 2") and ***IDL*** ("Low current detected") output signals.

Output signal	Data assigned to output terminal	Detection level	Timer	Motor characteristics	Thermal time constant
		Range: See below	Range: 0.01 to 600.00 s	Range: See below	Range: 0.5 to 75.0 min
OL	7	E34	--	F10	F12
ID	37	E34	E35	--	--
ID2	38	E37	E38		
IDL	41	E34	E35		

- Data setting range

  Operation level: 0.00 (Disable), 1 to 200% of inverter rated current

  Motor characteristics 1: Enable (For a general-purpose motor and Fuji standard permanent magnet synchronous motor with shaft-driven cooling fan)

  2: Enable (For an inverter-driven motor with separately powered cooling fan)

■ Motor overload early warning signal -- ***OL***

The ***OL*** signal is used to detect a symptom of an overload condition (alarm code $\square L$ 1) of the motor so that the user can take an appropriate action before the alarm actually happens.

The ***OL*** signal turns ON when the inverter output current has exceeded the level specified by E34. In typical cases, set E34 data to 80 to 90% against F11 data (Electronic thermal overload protection for motor 1, Overload detection level). Specify also the thermal characteristics of the motor with F10 (Select motor characteristics) and F12 (Thermal time constant). To utilize this feature, you need to assign ***OL*** (data = 7) to any of the digital output terminals.

■ Current detected and Current detected 2 signals -- ***ID*** and ***ID2***

When the inverter output current has exceeded the level specified by E34 or E37 and it continues longer than the period specified by E35 or E38, the ***ID*** or ***ID2*** signal turns ON, respectively. When the output current drops below 90% of the rated operation level, the ***ID*** or ***ID2*** turns OFF. (Minimum width of the output signal: 100 ms)

To utilize this feature, you need to assign ***ID*** (data = 37) or ***ID2*** (data = 38) to any of digital output terminals.

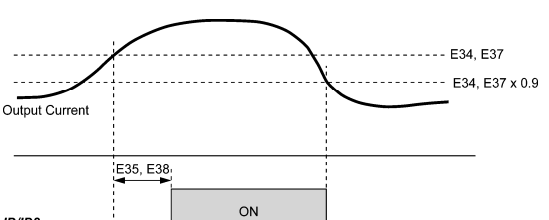

■ Low current detected -- ***IDL***

This signal turns ON when the output current drops below the low current detection level (E34) and remains at the low level for the timer period (E35). When the output current exceeds the "Low current detection level plus 5% of the inverter rated current," it goes OFF. (The minimum ON-duration is 100 ms.)

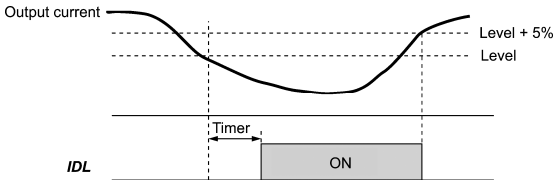

E39 Coefficient for Constant Feeding Rate Time
E50 Coefficient for Speed Indication

E39 and E50 specify coefficients for determining the constant feeding rate time, load shaft speed, and line speed, as well as for displaying the output status monitored.

Calculation expression

$$\text{Constant feeding rate time (min)} = \frac{\text{Coefficient for speed indication (E50)}}{\text{Frequency} \times \text{Coefficient for constant feeding rate time (E39)}}$$

Load shaft speed = Coefficient for speed indication (E50) × Frequency (Hz)

Line speed = Coefficient for speed indication (E50) × Frequency (Hz)

Where, the "frequency" refers to the "reference frequency" to be applied for settings (constant feeding rate time, load shaft speed, or line speed), or to the "output frequency before slip compensation" to be applied for monitor.

If the constant feeding rate time is 999.9 min. or more or the denominator of the right-hand side is zero (0), "999.9" appears.

E51 Display Coefficient for Input Watt-hour Data

Use this coefficient (multiplication factor) for displaying the input watt-hour data (5_17) in a part of maintenance information on the keypad.

Input watt-hour data = Display coefficient (E51 data) × Input watt-hour (kWh)

Note Setting E51 data to 0.000 clears the input watt-hour and its data to "0." After clearing, be sure to restore E51 data to the previous value; otherwise, input watt-hour data will not be accumulated.

E52 Keypad (Menu display mode)

E52 provides a choice of three menu display modes for the keypad as listed below.

Data for E52	Menu display mode	Menus to be displayed
0	Function code data editing mode	Menu #1
1	Function code data check mode	Menu #2
2	Full-menu mode	Menus #1 through #6 *

* Menus #1 through #7 when a remote keypad is connected.

Tip Selecting the full-menu mode (E52 = 2) allows you to cycle through the menus with the ▲ or ▼ key and select the desired menu item with the FUNC/DATA key. Once the entire menu has been cycled through, the display returns to the first menu item.

E60 Built-in Potentiometer (Function selection)
E61 Terminal [12] Extended Function
E62 Terminal [C1] Extended Function

E60 through E62 define the property of the built-in potentiometer and terminals [12] and [C1], respectively.

There is no need to set up the potentiometer and terminals if they are to be used for frequency command sources.

Data for E60, E61, or E62	Function	Description
0	None	--
1	Auxiliary frequency command 1	This is an auxiliary analog frequency input to be added to frequency command 1 (F01). It is never added to frequency command 2, multistep frequency command or other frequency commands.
2	Auxiliary frequency command 2	This is an auxiliary analog frequency input to be added to all frequency commands including frequency command 1, frequency command 2 and multistep frequency commands.
3	PID command 1	This input includes temperature, pressure or other commands to apply under the PID control. Function code J02 should be also configured.
5	PID feedback amount	This input includes the feedback of the temperature or pressure under the PID control. (Not available for E60.)

Note If the built-in potentiometer and different terminals have been set up to have the same data, the operation priority is given in the following order:

E60 > E61 > E62

Selecting the ***UP*/*DOWN*** control (F01, C30 = 7) ignores auxiliary frequency command 1 and 2.

C21 Timer Operation

C21 enables or disables a timer operation that is triggered by a run command and continues for the timer count previously specified with the ▲/▼ keys. The operating procedure for the timer operation is given below.

Data for C21	Function
0	Disable timer operation
1	Enable timer operation

Tip

- Pressing the STOP key during timer countdown quits the timer operation.
- Even if C21 = 1, setting the timer to 0 no longer starts the timer operation with the RUN key.
- Applying terminal command ***FWD*** or ***REV*** instead of the key command can also start the timer operation.

Operating procedure for timer operation (example)

Preparation

- To display the timer count on the LED monitor, set E43 (LED Monitor) to "13" (Timer) and set C21 (Timer Operation) to "1" (Enable).
- Specify the reference frequency to apply to timer operation. When the keypad is selected as a frequency command source, press the FUNC/DATA key to shift to the speed monitor and specify the desired reference frequency.

Triggering the timer operation with the RUN key

(1) While watching the timer count displayed on the LED monitor, press the ▲/▼ key to set the timer for the desired count in seconds. Note that the timer count on the LED monitor appears as an integral number without a decimal point.

(2) Press the RUN key. The motor starts running and the timer starts counting down. If the timer counts down, the motor stops without pressing the STOP key. (Even if the LED monitor displays any item except the timer count, the timer operation is possible.)

Note After the countdown of the timer operation triggered by a terminal command such as ***FWD***, the inverter decelerates to stop and at that moment the LED monitor displays End and any LED monitor item (for the timer count) alternately. Turning ***FWD*** OFF returns to the LED monitor item.

C33 Analog Input Adjustment for Terminal [12] (Filter time constant)
C38 Analog Input Adjustment for Terminal [C1] (Filter time constant)

C33 and C38 configure a filter time constant for an analog voltage and current input on terminals [12] and [C1], respectively.

The larger the time constant, the slower the response. Specify the proper filter time constant taking into account the response speed of the machine (load). If the input voltage fluctuates due to line noise, remove the cause of the noise or take an electric circuit related measure. Only when no effect is obtained, increase the time constant.

P02 Motor 1 (Rated capacity)

P02 specifies the rated capacity of the motor. Enter the rated value given on the nameplate of the motor.

Data for P02	Unit	Remarks
0.01 to 30.00	kW	When P99 = 0, 3, 4, 20 or 21
	HP	When P99 = 1

P03 Motor 1 (Rated current)

P03 specifies the rated current of the motor. Enter the rated value given on the nameplate of the motor.

P04 Motor 1 (Auto-tuning)

The inverter automatically detects the motor parameters and saves them in its internal memory. Basically, it is not necessary to perform tuning when using a Fuji standard motor with a standard connection with the inverter.

In any of the following cases, perform auto-tuning since the motor parameters are different from those of Fuji standard motors so as not to obtain the best performance under each of these controls-- auto torque boost, torque calculation monitoring, auto energy saving operation, automatic deceleration (anti-regenerative control), slip compensation, and torque vector control.

- The motor to be driven is made by other manufacturer or is a non-standard motor.
- Cabling between the motor and the inverter is long.
- A reactor is inserted between the motor and the inverter.

For details of auto-tuning, refer to Chapter 4, Section 4.1.3 "Preparation before a test run--Configuring function code data."

P06, P07 P08, P12 Motor 1 (No-load current, %R1, %X and Motor 1, Rated slip frequency)

P06 through P08 and P12 specify no-load current, %R1, %X, and rated slip frequency, respectively. Obtain the appropriate values from the test report of the motor or by calling the manufacturer of the motor.

Performing auto-tuning automatically sets these parameters.

■ No-load current (P06): Enter the value obtained from the motor manufacturer.

■ %R1 (P07): Enter the value calculated by the following expression.

$$\%R1 = \frac{R1 + \text{Cable R1}}{V / (\sqrt{3} \times I)} \times 100 \ (\%)$$

where,

R1: Primary resistance of the motor (Ω)

Cable R1: Resistance of the output cable (Ω)

V: Rated voltage of the motor (V)

I: Rated current of the motor (A)

■ %X (P08): Enter the value calculated by the following expression.

$$\%X = \frac{X1 + X2 \times XM / (X2 + XM) + \text{Cable } X}{V / (\sqrt{3} \times I)} \times 100\ (\%)$$

where,

X1: Primary leakage reactance of the motor (Ω)

X2: Secondary leakage reactance of the motor (converted to primary) (Ω)

XM: Exciting reactance of the motor (Ω)

Cable X: Reactance of the output cable (Ω)

V: Rated voltage of the motor (V)

I: Rated current of the motor (A)

■ Rated slip frequency (P12)

Convert the value obtained from the motor manufacturer to Hz using the following expression and enter the converted value. (Note: The motor rating given on the nameplate sometimes shows a larger value.)

$$\text{Rated slip frequency (Hz)} = \frac{\text{(Synchronous speed - Rated speed)}}{\text{Synchronous speed}} \text{ x Base frequency}$$

Note For reactance, choose the value at the base frequency 1 (F04).

P09	Motor 1 (Slip compensation gain for driving)
P10	(Slip compensation response time)
P11	(Slip compensation gain for braking)

P09 and P11 determine the slip compensation amount in % for driving and braking individually. Specification of 100% fully compensates for the rated slip of the motor. Excessive compensation (P09, P11 > 100%) may cause a system oscillation, so carefully check the operation on the actual machine.

P10 determines the response time for slip compensation. Basically, there is no need to modify the default setting. If you need to modify it, consult your Fuji Electric representatives.

P99 Motor 1 Selection

P99 specifies the type of motor 1 to be used.

Data for P99	Motor type
0	Motor characteristics 0 (Fuji standard IM, 8-series)
1	Motor characteristics 1 (HP rating IM. Typical in North America)
3	Motor characteristics 3 (Fuji standard IM, 6-series)
4	Other motors (IM)
20	Other motors (PMSM)
21	Fuji standard PMSM without sensor (GNB series)

Automatic control (such as auto torque boost and auto energy saving) or electronic thermal overload protection for motor uses the motor parameters and characteristics. To match the property of a control system with that of the motor, select characteristics of the motor and set H03 data (Data Initialization) to "2" to initialize the motor parameters stored in the inverter. The initialization automatically updates the P03 and P06 to P12 data and the constants used inside the inverter.

According to the motor model, set the P99 data as shown below.

- For Fuji standard IM, 8-series (Current standard induction motors), P99 = 0
- For Fuji standard IM, 6-series (Conventional standard induction motors), P99 = 3
- For other manufacturers' IM or model-unknown IM, P99 =4
- For PMSM, P99 = 20 or 21 (to be selected after consultation with motor manufacturers)

Note

- When P99 = 4, the inverter runs following the motor characteristics of Fuji standard IM, 8-series.
- When P99 = 1, the inverter applies to the characteristics of HP rating IM (Typical in North America).

H03 Data Initialization

H03 initializes the current function code data to the factory defaults or initializes the motor parameters.

To change the H03 data, it is necessary to press the STOP + ∧ keys or STOP + ∨ keys (simultaneous keying).

Data for H03	Function
0	Disable initialization (Settings manually made by the user will be retained.)
1	Initialize all function code data to the factory defaults
2	Initialize motor 1 parameters in accordance with P02 (Rated capacity) and P99 (Motor 1 selection) Function codes subject to initialization: P03, P06 to P12 and constants for internal control (These function codes will be initialized to the values listed in tables on the following pages.)
3	Initialize motor 2 parameters in accordance with A16 (Rated capacity) and A39 (Motor 2 selection) Function codes subject to initialization: A17, A20 to A26 and constants for internal control (These function codes will be initialized to the values listed in tables on the following pages.)

- To initialize the motor parameters, set the related function codes using the following steps.

  1) P02/A16 Motor (Rated capacity) — Set the rated capacity of the motor to be used in kW.
  2) P99/A39 Motor Selection — Select the characteristics of the motor.
  3) H03 Data Initialization — Initialize the motor parameters. (H03 = 2 or 3)
  4) P03/A17 Motor (Rated current) — Set the rated current on the nameplate if the already set data differs from the rated current printed on the nameplate of the motor.

- Upon completion of the initialization, the H03 data reverts to "0" (factory default).
- If the P02 or A16 data is set to a value other than the nominal applied motor rating, data initialization with H03 internally converts the specified value forcedly to the equivalent nominal applied motor rating (see the tables on the next page).
- When a PMSM is selected (P99 = 20 or 21), initializing motor parameters by setting the H03 data to "2" reverts function code data for both IM and PMSM to factory defaults.

■ When Fuji standard 8-series IM (P99 = 0 or A39 = 0) or other motors (P99 = 4 or A39 = 4) are selected, the motor parameters are as listed in the following tables.

200 V class series for Asia version (FRN_ _ _ _C2S-2A, FRN_ _ _ _C2S-7A)

220 V, 60 Hz, rated voltage, base frequency, Fuji standard 8-series

Motor capacity (kW)	Nominal applied motor (kW)	Rated current (A)	No-load current (A)	%R (%)	%X (%)	Rated slip frequency (Hz)
P02/A16		P03/A17	P06/A20	P07/A21	P08/A22	P12/A26
0.01 to 0.09	0.06	0.40	0.37	11.40	9.71	1.77
0.10 to 0.19	0.1	0.62	0.50	10.74	10.50	1.77
0.20 to 0.39	0.2	1.18	0.97	10.69	10.66	2.33
0.40 to 0.74	0.4	2.10	1.52	8.47	11.34	2.40
0.75 to 1.49	0.75	3.29	2.11	7.20	8.94	2.33
1.50 to 2.19	1.5	5.56	2.76	5.43	9.29	2.00
2.20 to 3.69	2.2	8.39	4.45	5.37	9.09	1.80
3.70 to 5.49	3.7	13.67	7.03	4.80	9.32	1.93
5.50 to 7.49	5.5	20.50	10.08	4.37	11.85	1.40
7.50 to 10.99	7.5	26.41	11.46	3.73	12.15	1.57
11.00 to 14.99	11	38.24	16.23	3.13	12.49	1.07
15.00 to 18.49	15	50.05	18.33	2.69	13.54	1.13
18.50 to 21.99	18.5	60.96	19.62	2.42	13.71	0.87
22.00 to 29.99	22	70.97	23.01	2.23	13.24	0.90
30.00	30	97.38	35.66	2.18	12.38	0.80

400 V class series for Asia version (FRN_ _ _ _C2S-4A)

380 V, 60 Hz, rated voltage, base frequency, Fuji standard 8-series

Motor capacity (kW)	Nominal applied motor (kW)	Rated current (A)	No-load current (A)	%R (%)	%X (%)	Rated slip frequency (Hz)
P02/A16		P03/A17	P06/A20	P07/A21	P08/A22	P12/A26
0.01 to 0.09	0.06	0.19	0.16	12.54	10.68	1.77
0.10 to 0.19	0.10	0.31	0.21	12.08	11.81	1.77
0.20 to 0.39	0.20	0.58	0.42	12.16	12.14	2.33
0.40 to 0.74	0.4	1.07	0.66	9.99	13.38	2.40
0.75 to 1.49	0.75	1.72	0.91	8.72	10.82	2.33
1.50 to 2.19	1.5	3.10	1.20	6.89	11.80	2.00
2.20 to 3.69	2.2	4.54	1.92	6.73	11.40	1.80
3.70 to 5.49	3.7	7.43	3.04	6.04	11.73	1.93
5.50 to 7.49	5.5	11.49	4.35	5.55	15.05	1.40
7.50 to 10.99	7.5	14.63	4.95	4.78	15.59	1.57
11.00 to 14.99	11	21.23	7.01	4.02	16.06	1.07
15.00 to 18.49	15	28.11	7.92	3.50	17.61	1.13
18.50 to 21.99	18.5	35.04	8.47	3.16	17.97	0.87
22.00 to 29.99	22	40.11	9.98	2.92	17.32	0.90
30.00	30	55.21	15.44	2.84	16.10	0.80

200 V class series for China version (FRN_ _ _ _C2S-7C)

200 V, 50 Hz, rated voltage, base frequency, Fuji standard 8-series

Motor capacity (kW)	Nominal applied motor (kW)	Rated current (A)	No-load current (A)	%R (%)	%X (%)	Rated slip frequency (Hz)
P02/A16		P03/A17	P06/A20	P07/A21	P08/A22	P12/A26
0.01 to 0.09	0.06	0.44	0.40	13.79	11.75	1.77
0.10 to 0.19	0.1	0.68	0.55	12.96	12.67	1.77
0.20 to 0.39	0.2	1.30	1.06	12.95	12.92	2.33
0.40 to 0.74	0.4	2.30	1.66	10.20	13.66	2.40
0.75 to 1.49	0.75	3.60	2.30	8.67	10.76	2.33
1.50 to 2.19	1.5	6.10	3.01	6.55	11.21	2.00
2.20 to 3.69	2.2	9.20	4.85	6.48	10.97	1.80
3.70 to 5.49	3.7	15.00	7.67	5.79	11.25	1.93
5.50 to 7.49	5.5	22.50	11.00	5.28	14.31	1.40
7.50 to 10.99	7.5	29.00	12.50	4.50	14.68	1.57
11.00 to 14.99	11	42.00	17.70	3.78	15.09	1.07
15.00 to 18.49	15	55.00	20.00	3.25	16.37	1.13
18.50 to 21.99	18.5	67.00	21.40	2.92	16.58	0.87
22.00 to 29.99	22	78.00	25.10	2.70	16.00	0.90
30.00	30	107.0	38.90	2.64	14.96	0.80

400 V class series for China version (FRN_ _ _ _C2S-4C)

380 V, 50 Hz, rated voltage, base frequency, Fuji standard 8-series

Motor capacity (kW)	Nominal applied motor (kW)	Rated current (A)	No-load current (A)	%R (%)	%X (%)	Rated slip frequency (Hz)
P02/A16		P03/A17	P06/A20	P07/A21	P08/A22	P12/A26
0.01 to 0.09	0.06	0.21	0.19	13.86	11.81	1.77
0.10 to 0.19	0.10	0.34	0.26	13.25	12.96	1.77
0.20 to 0.39	0.20	0.64	0.50	13.42	13.39	2.33
0.40 to 0.74	0.4	1.15	0.79	10.74	14.38	2.40
0.75 to 1.49	0.75	1.82	1.09	9.23	11.45	2.33
1.50 to 2.19	1.5	3.20	1.43	7.12	12.18	2.00
2.20 to 3.69	2.2	4.72	2.31	7.00	11.85	1.80
3.70 to 5.49	3.7	7.70	3.65	6.26	12.16	1.93
5.50 to 7.49	5.5	11.84	5.23	5.72	15.51	1.40
7.50 to 10.99	7.5	15.00	5.94	4.90	15.98	1.57
11.00 to 14.99	11	21.73	8.41	4.12	16.44	1.07
15.00 to 18.49	15	28.59	9.50	3.56	17.92	1.13
18.50 to 21.99	18.5	35.46	10.17	3.21	18.20	0.87
22.00 to 29.99	22	40.66	11.97	2.96	17.56	0.90
30.00	30	56.15	18.53	2.89	16.37	0.80

200 V class series for Europe version (FRN_ _ _ _C2S-7E)

230 V, 50 Hz, rated voltage, base frequency, Fuji standard 8-series

Motor capacity (kW)	Nominal applied motor (kW)	Rated current (A)	No-load current (A)	%R (%)	%X (%)	Rated slip frequency (Hz)
P02/A16		P03/A17	P06/A20	P07/A21	P08/A22	P12/A26
0.01 to 0.09	0.06	0.49	0.46	13.35	11.38	1.77
0.10 to 0.19	0.1	0.73	0.63	12.10	11.83	1.77
0.20 to 0.39	0.2	1.38	1.22	11.95	11.93	2.33
0.40 to 0.74	0.4	2.36	1.91	9.10	12.19	2.40
0.75 to 1.49	0.75	3.58	2.65	7.50	9.30	2.33
1.50 to 2.19	1.5	5.77	3.46	5.39	9.22	2.00
2.20 to 3.69	2.2	8.80	5.58	5.39	9.12	1.80
3.70 to 5.49	3.7	14.26	8.82	4.79	9.30	1.93
5.50 to 7.49	5.5	21.25	12.65	4.34	11.75	1.40
7.50 to 10.99	7.5	26.92	14.38	3.63	11.85	1.57
11.00 to 14.99	11	38.87	20.36	3.04	12.14	1.07
15.00 to 18.49	15	50.14	23.00	2.58	12.98	1.13
18.50 to 21.99	18.5	60.45	24.61	2.29	13.01	0.87
22.00 to 29.99	22	70.40	28.87	2.12	12.56	0.90
30.00	30	97.54	44.74	2.09	11.86	0.80

400 V class series for Europe version (FRN_ _ _ _C2S-4E)

400 V, 50 Hz, rated voltage, base frequency, Fuji standard 8-series

Motor capacity (kW)	Nominal applied motor (kW)	Rated current (A)	No-load current (A)	%R (%)	%X (%)	Rated slip frequency (Hz)
P02/A16		P03/A17	P06/A20	P07/A21	P08/A22	P12/A26
0.01 to 0.09	0.06	0.22	0.20	13.79	11.75	1.77
0.10 to 0.19	0.10	0.35	0.27	12.96	12.67	1.77
0.20 to 0.39	0.20	0.65	0.53	12.95	12.92	2.33
0.40 to 0.74	0.4	1.15	0.83	10.20	13.66	2.40
0.75 to 1.49	0.75	1.80	1.15	8.67	10.76	2.33
1.50 to 2.19	1.5	3.10	1.51	6.55	11.21	2.00
2.20 to 3.69	2.2	4.60	2.43	6.48	10.97	1.80
3.70 to 5.49	3.7	7.50	3.84	5.79	11.25	1.93
5.50 to 7.49	5.5	11.50	5.50	5.28	14.31	1.40
7.50 to 10.99	7.5	14.50	6.25	4.50	14.68	1.57
11.00 to 14.99	11	21.00	8.85	3.78	15.09	1.07
15.00 to 18.49	15	27.50	10.00	3.25	16.37	1.13
18.50 to 21.99	18.5	34.00	10.70	2.92	16.58	0.87
22.00 to 29.99	22	39.00	12.60	2.70	16.00	0.90
30.00	30	54.00	19.50	2.64	14.96	0.80

200 V class series for USA version (FRN_ _ _ _C2S-2U, FRN_ _ _ _C2S-7U)

230 V, 60 Hz, rated voltage, base frequency, Fuji standard 8-series

Motor capacity (kW)	Nominal applied motor (kW)	Rated current (A)	No-load current (A)	%R (%)	%X (%)	Rated slip frequency (Hz)
P02/A16		P03/A17	P06/A20	P07/A21	P08/A22	P12/A26
0.01 to 0.09	0.06	0.42	0.38	11.45	9.75	1.77
0.10 to 0.19	0.1	0.63	0.53	10.44	10.21	1.77
0.20 to 0.39	0.2	1.21	1.02	10.48	10.46	2.33
0.40 to 0.74	0.4	2.11	1.59	8.14	10.90	2.40
0.75 to 1.49	0.75	3.27	2.20	6.85	8.50	2.33
1.50 to 2.19	1.5	5.44	2.88	5.08	8.69	2.00
2.20 to 3.69	2.2	8.24	4.65	5.05	8.54	1.80
3.70 to 5.49	3.7	13.40	7.35	4.50	8.74	1.93
5.50 to 7.49	5.5	20.06	10.54	4.09	11.09	1.40
7.50 to 10.99	7.5	25.72	11.98	3.47	11.32	1.57
11.00 to 14.99	11	37.21	16.96	2.91	11.63	1.07
15.00 to 18.49	15	48.50	19.17	2.49	12.55	1.13
18.50 to 21.99	18.5	58.90	20.51	2.23	12.68	0.87
22.00 to 29.99	22	68.57	24.05	2.06	12.23	0.90
30.00	30	94.36	37.28	2.02	11.47	0.80

400 V class series for USA version (FRN_ _ _ _C2S-4U)

460 V, 60 Hz, rated voltage, base frequency, Fuji standard 8-series

Motor capacity (kW)	Nominal applied motor (kW)	Rated current (A)	No-load current (A)	%R (%)	%X (%)	Rated slip frequency (Hz)
P02/A16		P03/A17	P06/A20	P07/A21	P08/A22	P12/A26
0.01 to 0.09	0.06	0.21	0.19	11.45	9.75	1.77
0.10 to 0.19	0.10	0.32	0.26	10.30	10.07	1.77
0.20 to 0.39	0.20	0.61	0.51	10.57	10.54	2.33
0.40 to 0.74	0.4	1.06	0.80	8.18	10.95	2.40
0.75 to 1.49	0.75	1.63	1.10	6.83	8.47	2.33
1.50 to 2.19	1.5	2.76	1.45	5.07	8.68	2.00
2.20 to 3.69	2.2	4.12	2.33	5.05	8.54	1.80
3.70 to 5.49	3.7	6.70	3.68	4.50	8.74	1.93
5.50 to 7.49	5.5	10.24	5.27	4.09	11.08	1.40
7.50 to 10.99	7.5	12.86	5.99	3.47	11.32	1.57
11.00 to 14.99	11	18.60	8.48	2.91	11.62	1.07
15.00 to 18.49	15	24.25	9.58	2.49	12.55	1.13
18.50 to 21.99	18.5	29.88	10.25	2.23	12.67	0.87
22.00 to 29.99	22	34.29	12.08	2.06	12.23	0.90
30.00	30	47.61	18.69	2.02	11.47	0.80

■ When HP rating IM (P99 = 1 or A39 = 1) is selected, the motor parameters are as listed in the following tables. (HP refers to horse power that is used mainly in North America as a unit of motor capacity.)

200 V class series for all destinations

230V, 60 Hz, rated voltage, base frequency

Motor capacity (kW)	Nominal applied motor (kW)	Rated current (A)	No-load current (A)	%R (%)	%X (%)	Rated slip frequency (Hz)
P02/A16		P03/A17	P06/A20	P07/A21	P08/A22	P12/A26
0.01 to 0.11	0.10	0.44	0.40	13.79	11.75	2.50
0.12 to 0.24	0.12	0.68	0.55	12.96	12.67	2.50
0.25 to 0.49	0.25	1.40	1.12	11.02	13.84	2.50
0.50 to 0.99	0.5	2.00	1.22	6.15	8.80	2.50
1.00 to 1.99	1	3.00	1.54	3.96	8.86	2.50
2.00 to 2.99	2	5.80	2.80	4.29	7.74	2.50
3.00 to 4.99	3	7.90	3.57	3.15	20.81	1.17
5.00 to 7.49	5	12.60	4.78	3.34	23.57	1.50
7.50 to 9.99	7.5	18.60	6.23	2.65	28.91	1.17
10.00 to 14.99	10	25.30	8.75	2.43	30.78	1.17
15.00 to 19.99	15	37.30	12.70	2.07	29.13	1.00
20.00 to 24.99	20	49.10	9.20	2.09	29.53	1.00
25.00 to 29.99	25	60.00	16.70	1.75	31.49	1.00
30.00 to 39.99	30	72.40	19.80	1.90	32.55	1.00

400 V class series for all destinations

460V, 60 Hz, rated voltage, base frequency

Motor capacity (kW)	Nominal applied motor (kW)	Rated current (A)	No-load current (A)	%R (%)	%X (%)	Rated slip frequency (Hz)
P02/A16		P03/A17	P06/A20	P07/A21	P08/A22	P12/A26
0.01 to 0.11	0.10	0.22	0.20	13.79	11.75	2.50
0.12 to 0.24	0.12	0.34	0.27	12.96	12.67	2.50
0.25 to 0.49	0.25	0.70	0.56	11.02	13.84	2.50
0.50 to 0.99	0.5	1.00	0.61	6.15	8.80	2.50
1.00 to 1.99	1	1.50	0.77	3.96	8.86	2.50
2.00 to 2.99	2	2.90	1.40	4.29	7.74	2.50
3.00 to 4.99	3	4.00	1.79	3.15	20.81	1.17
5.00 to 7.49	5	6.30	2.39	3.34	23.57	1.50
7.50 to 9.99	7.5	9.30	3.12	2.65	28.91	1.17
10.00 to 14.99	10	12.70	4.37	2.43	30.78	1.17
15.00 to 19.99	15	18.70	6.36	2.07	29.13	1.00
20.00 to 24.99	20	24.60	4.60	2.09	29.53	1.00
25.00 to 29.99	25	30.00	8.33	1.75	31.49	1.00
30.00 to 39.99	30	36.20	9.88	1.90	32.55	1.00

H04, H05 Auto-reset (Times and Reset interval)

H04 and H05 specify the auto-reset function that makes the inverter automatically attempt to reset the tripped state and restart without issuing an alarm (for any faults) even if any protective function subject to reset is activated and the inverter enters the forced-to-stop state (tripped state).

If the protective function works in excess of the times specified by H04, the inverter will issue an alarm (for any faults) and not attempt to auto-reset the tripped state.

Listed below are the recoverable alarm statuses to be retried.

Alarm status	LED monitor displays:	Alarm status	LED monitor displays:
Overcurrent protection	OC 1, OC2 or OC3	Motor overheated	OH4
Overvoltage protection	OU 1, OU2 or OU3	Motor overloaded	OL 1 or OL2
Heat sink overheated	OH 1	Inverter overloaded	OLU
Braking resistor overheated	dbH		

■ Number of reset times (H04)

H04 specifies the number of reset times for the inverter to automatically attempt to escape from the tripped state. When H04 = 0, the auto-reset function will not be activated.

⚠WARNING

If the "auto-reset" function has been specified, the inverter may automatically restart and run the motor stopped due to a trip fault, depending on the cause of the tripping.

Design the machinery so that human body and peripheral equipment safety is ensured even when the auto-resetting succeeds.

Otherwise an accident could occur.

■ Reset interval (H05)

After the reset interval specified by H05 from when the inverter enters the tripped state, it issues a reset command to auto-reset the tripped state. Refer to the timing scheme diagram below.

<Timing scheme for failed retry (No. of reset times: 3)>

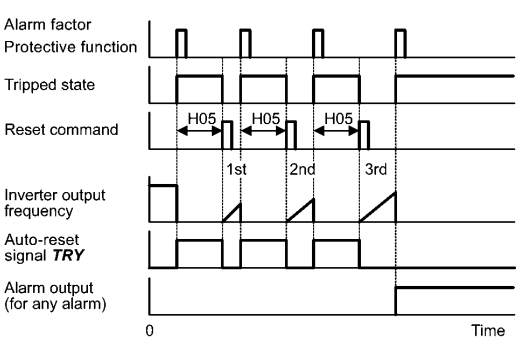

The auto-reset operation can be monitored from the external equipment by assigning the digital output signal TRY to any of the programmable output terminals [Y1] and [30A/B/C] with E20 or E27 (data = 26).

H06 Cooling Fan ON/OFF Control

To prolong the life of the cooling fan and reduce fan noise during running, the cooling fan stops when the temperature inside the inverter drops below a certain level while the inverter stops. However, since frequent switching of the cooling fan shortens its life, the cooling fan is kept running for 10 minutes once it is started.

H06 specifies whether to keep running the cooling fan all the time or to control its ON/OFF.

Data for H06	Cooling fan ON/OFF
0	Disable (Cooling fan always ON)
1	Enable (ON/OFF control effective)

H07 Acceleration/Deceleration Pattern

H07 specifies the acceleration and deceleration patterns (patterns to control output frequency).

Linear acceleration/deceleration

The inverter runs the motor with the constant acceleration and deceleration.

S-curve acceleration/deceleration

To reduce an impact that acceleration/deceleration would make on the machine (load), the inverter gradually accelerates or decelerates the motor in both starting and ending zones of acceleration/deceleration. Two types of S-curve acceleration/deceleration rates are available; 5% (weak) and 10% (strong) of the maximum frequency, which are shared by the four inflection points.

The acceleration/deceleration time command determines the duration of acceleration/ deceleration in the linear period; hence, the actual acceleration/deceleration time is longer than the reference acceleration/deceleration time.

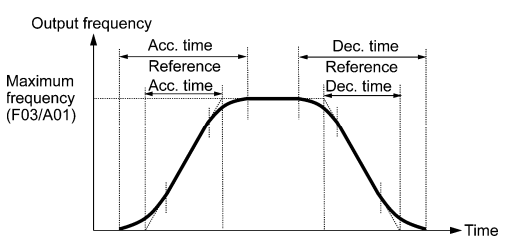

Acceleration/deceleration time

<S-curve acceleration/deceleration (weak): when the frequency change is 10% or more of the maximum frequency>

Acceleration or deceleration time (s) = (2 x 5/100 + 90/100+ 2 x 5/100) x (reference acceleration or deceleration time)

= 1.1 x (reference acceleration or deceleration time)

<S-curve acceleration/deceleration (strong): when the frequency change is 20% or more of the maximum frequency>

Acceleration or deceleration time (s) = (2 x 10/100 + 80/100 + 2 x 10/100) x (reference acceleration or deceleration time)

= 1.2 x (reference acceleration or deceleration time)

Curvilinear acceleration/deceleration

Acceleration/deceleration is linear below the base frequency (constant torque) but it slows down above the base frequency to maintain a certain level of load factor (constant output).

This acceleration/deceleration pattern allows the motor to accelerate or decelerate with the maximum performance of the motor.

Note Choose an appropriate acceleration/deceleration time, taking into account the machinery's load torque.

H11 Deceleration Mode

H11 specifies the deceleration mode to be applied when a run command is turned OFF.

Data for H11	Function
0	Normal deceleration The inverter decelerates and stops the motor according to deceleration commands specified by H07 (Acceleration/deceleration pattern), F08 (Deceleration time 1), and E11 (Deceleration time 2).
1	Coast-to-stop The inverter immediately shuts down its output, so the motor stops according to the inertia of the motor and machine and their kinetic energy losses.

Note When reducing the reference frequency, the inverter decelerates the motor according to the deceleration commands even if H11 = 1 (Coast-to-stop).

H12 Instantaneous Overcurrent Limiting (Mode selection)

H12 specifies whether the inverter invokes the current limit processing or enters the overcurrent trip when its output current exceeds the instantaneous overcurrent limiting level. Under the current limit processing, the inverter immediately turns OFF its output gate to suppress the further current increase and continues to control the output frequency.

Data for H12	Function
0	Disable An overcurrent trip occurs at the instantaneous overcurrent limiting level.
1	Enable The current limiting operation is effective.

If any problem occurs when the motor torque temporarily drops during current limiting processing, it is necessary to cause an overcurrent trip (H12 = 0) and actuate a mechanical brake at the same time.

Note

The similar function is the current limiter specified by F43 and F44. The current limiter (F43, F44) implements the current control by software, so an operation delay occurs. When you have enabled the current limiter (F43, F44), also enable the instantaneous overcurrent limiting with H12 to obtain a quick response current limiting.

Depending on the load, extremely short acceleration time may activate the current limiting to suppress the increase of the inverter output frequency, causing hunting (undesirable oscillation of the system) or activating the inverter overvoltage trip (alarm OU). When specifying the acceleration time, therefore, you need to take into account machinery characteristics and moment of inertia of the load.

⚠CAUTION

When the instantaneous overcurrent limiting is enabled, the motor output torque could drop. For driving elevating machinery which could cause a serious problem with a drop of the motor output torque, therefore, disable the instantaneous overcurrent limiting. Note that disabling it will cause an overcurrent trip when a current exceeding the inverter protection level flows, so secure the protective coordination using a mechanical brake.

An accident could occur.

H45 Mock Alarm
H97 Clear Alarm Data

H45 causes the inverter to generate a mock alarm in order to check whether external sequences function correctly at the time of machine setup.

Setting the H45 data to "1" displays mock alarm $\bar{E}\text{-}\text{-}$ on the LED monitor. It also issues alarm output ***ALM*** (if assigned to a digital output terminal specified by E20 or E27). (Accessing the H45 data requires simultaneous keying of "STOP key + ∧ key.") After that, the H45 data automatically reverts to "0," allowing you to reset the alarm.

Just as for data (alarm history and relevant information) of those alarms that could occur in running the inverter, the inverter saves mock alarm data, enabling you to confirm the mock alarm status.

To clear the mock alarm data, use H97. (Accessing the H97 data requires simultaneous keying of "STOP key + ∧ key.") H97 data automatically reverts to "0" after clearing the alarm data.

H69 Automatic Deceleration (Anti-regenerative control) (Mode selection)
H76 Automatic Deceleration (Frequency increment limit for braking)

H69 specifies the anti-regenerative control.

In inverters not equipped with a PWM converter or braking resistor, if regenerative energy returned exceeds the inverter's braking capability, an overvoltage trip occurs.

When H69 = 1: The anti-regenerative control is functionally equivalent to that of the original FRENIC-Mini series (FRN□□□C1□-□□). That is, when the DC link bus voltage exceeds the preset voltage limiting level, the inverter lengthens the deceleration time to three times the specified time to decrease the deceleration torque to 1/3. In this way, the inverter reduces the regenerative energy tentatively. This control applies only in deceleration. When the load on the motor results in a braking effect, the control does not have any effect.

When H69 = 2 or 4: The inverter controls the output frequency to keep the braking torque at around 0 N·m in both acceleration/deceleration and constant speed running phases in order to avoid an overvoltage trip.

Since increasing the output frequency too much under anti-regenerative control is dangerous, the inverter has a torque limiter (Frequency increment limit for braking) that can be specified by H76. The torque limiter limits the inverter's output frequency to less than "Reference frequency + H76 setting."

Note that the torque limiter activated restrains the anti-regenerative control, resulting in a trip with an overvoltage alarm in some cases. Increasing the H76 data (0.0 to 400.0 Hz) makes the anti-regenerative control capability high.

In addition, during deceleration triggered by turning the run command OFF, the anti-regenerative control increases the output frequency so that the inverter may not stop the load depending on the load state (huge moment of inertia, for example). To avoid that, H69 provides a choice of cancellation of the anti-regenerative control to apply when three times the specified deceleration time is elapsed, thus decelerating the motor.

Data for H69	Function
0	Disable
1	Enable (Lengthen the deceleration time to three times the specified time under voltage limiting control.) (Compatible with the original FRENIC-Mini series FRN□□□C1□-□□)
2	Enable (Torque limit control: Cancel the anti-regenerative control if the actual deceleration time exceeds three times the specified one.)
4	Enable (Torque limit control: Disable force-to-stop processing.)

Note Enabling the anti-regenerative control may automatically increase the deceleration time.

When a braking resistor is connected, disable the anti-regenerative control.

H70 Overload Prevention Control

H70 specifies the decelerating rate of the output frequency to prevent a trip from occurring due to an overload. This control decreases the output frequency of the inverter before the inverter trips due to a heat sink overheat or inverter overload (with an alarm indication of OH1 or OLU , respectively). It is useful for equipment such as pumps where a decrease in the output frequency leads to a decrease in the load and it is necessary to keep the motor running even when the output frequency drops.

Data for H70	Function
0.00	Decelerate the motor by deceleration time 1 (F08) or 2 (E11)
0.01 to 100.00	Decelerate the motor by deceleration rate from 0.01 to 100.00 (Hz/s)
999	Disable overload prevention control

Note In equipment where a decrease in the output frequency does not lead to a decrease in the load, the overload prevention control is of no use and should not be enabled.

H71 Deceleration Characteristics

Setting the H71 data to "1" (ON) enables forced brake control. If regenerative energy produced during deceleration of the motor and returned to the inverter exceeds the inverter's braking capability, an overvoltage trip will occur. The forced brake control increases the motor energy loss during deceleration, increasing the deceleration torque.

Note This function is aimed at controlling the torque during deceleration; it has no effect if there is braking load.

Enabling the automatic deceleration (anti-regenerative control, H69 = 2 or 4) disables the deceleration characteristics specified by H71.

When replacing the original FRENIC-Mini series (FRN□□□C1□-□□) with the upgraded one (FRN□□□C2□-□□), note the following.

The original FRENIC-Mini series (FRN□□□C1□-□□) does not support H71, but H71 may be set to "1." On the upgraded one, however, it is not necessary to set H71 to "1."

H94 Cumulative Run Time of Motor 1

Operating the keypad can display the cumulative run time of motor 1. This feature is useful for management and maintenance of the machinery. Using H94 can modify the cumulative run time of the motor to the desired value to be used as an arbitrary initial data. Specifying "0" clears the cumulative run time.

H98 Protection/Maintenance Function (Mode selection)

H98 specifies whether to enable or disable (a) automatic lowering of carrier frequency, (b) input phase loss protection, (c) output phase loss protection, and (d) judgment on the life of the DC link bus capacitor, as well as specifying the judgment threshold on the life of the DC link bus capacitor, in a combination of Bit 0 to Bit 4.

Automatic lowering of carrier frequency (Bit 0)

This function should be used for important machinery that requires keeping the inverter running.

Even if a heat sink overheat or overload occurs due to excessive load, abnormal ambient temperature, or cooling system failure, enabling this function lowers the carrier frequency to avoid tripping (OH1 or OLU). Note that enabling this function results in increased motor noise.

Input phase loss protection (Lin) (Bit 1)

Upon detection of an excessive stress inflicted on the apparatus connected to the main circuit due to phase loss or line-to-line voltage unbalance in the three-phase power supplied to the inverter, this feature stops the inverter and displays an alarm Lin .

Note In configurations where only a light load is driven or a DC reactor is connected, phase loss or line-to-line voltage unbalance may not be detected because of the relatively small stress on the apparatus connected to the main circuit.

Output phase loss protection (OPL) (Bit 2)

Upon detection of phase loss in the output while the inverter is running, this feature stops the inverter and displays an alarm OPL . Where a magnetic contactor is installed in the inverter output circuit, if the magnetic contactor goes OFF during operation, all the phases will be lost. In such a case, this protection feature does not work.

Judgment threshold on the life of DC link bus capacitor (Bit 3)

Bit 3 is used to select the threshold for judging the life of the DC link bus capacitor between factory default setting and your own choice.

Note Before specifying the threshold of your own choice, measure and confirm the reference level in advance. For details, refer to Chapter 7.

Judgment on the life of DC link bus capacitor (Bit 4)

Whether the DC link bus capacitor has reached its life is determined by measuring the length of time for discharging after power OFF. The discharging time is determined by the capacitance of the DC link bus capacitor and the load inside the inverter. Therefore, if the load inside the inverter fluctuates significantly, the discharging time cannot be accurately measured, and as a result, it may be mistakenly determined that the life has been reached. To avoid such an error, you can disable the judgment on the life of the DC link bus capacitor.

Since load may vary significantly in the following cases, disable the judgment on the life during operation. Either conduct the measurement with the judgment enabled under appropriate conditions during periodical maintenance or conduct the measurement under the operating conditions matching the actual ones.

- A remote keypad (option) is used.
- Another inverter or equipment such as a PWM converter is connected to the terminals of the DC link bus.

For details, refer to Chapter 7.

To set data of H98, assign functions to each bit (total 5 bits) and set it in decimal format. The table below lists functions assigned to each bit.

Bit number	Bit 4	Bit 3	Bit 2	Bit 1	Bit 0
Function	Judge the life of DC link bus capacitor	Select life judgment threshold of DC link bus capacitor	Detect output phase loss	Detect input phase loss	Lower the carrier frequency automatically
Data = 0	Disable	Use the factory default	Disable	Disable	Disable
Data = 1	Enable	Use the user setting	Enable	Enable	Enable
Example of decimal expression (19)	Enable (1)	Use the factory default (0)	Disable (0)	Enable (1)	Enable (1)

Conversion table (Decimal to/from binary)

Decimal	Binary					Decimal	Binary				
	Bit 4	Bit 3	Bit 2	Bit 1	Bit 0		Bit 4	Bit 3	Bit 2	Bit 1	Bit 0
0	0	0	0	0	0	16	1	0	0	0	0
1	0	0	0	0	1	17	1	0	0	0	1
2	0	0	0	1	0	18	1	0	0	1	0
3	0	0	0	1	1	19	1	0	0	1	1
4	0	0	1	0	0	20	1	0	1	0	0
5	0	0	1	0	1	21	1	0	1	0	1
6	0	0	1	1	0	22	1	0	1	1	0
7	0	0	1	1	1	23	1	0	1	1	1
8	0	1	0	0	0	24	1	1	0	0	0
9	0	1	0	0	1	25	1	1	0	0	1
10	0	1	0	1	0	26	1	1	0	1	0
11	0	1	0	1	1	27	1	1	0	1	1
12	0	1	1	0	0	28	1	1	1	0	0
13	0	1	1	0	1	29	1	1	1	0	1
14	0	1	1	1	0	30	1	1	1	1	0
15	0	1	1	1	1	31	1	1	1	1	1

5.3 Notes in Driving PMSM

When driving a permanent magnet synchronous motor (PMSM), observe the following notes. Items not covered in this section are the same as for induction motor (IM) drive.

The PMSM drive is available in the ROM version 0500 or later. (The ROM version can be checked with item 5_ 14 on Menu #5 "Maintenance information" in Programming mode.)

Item	Specifications
Drive by commercial power	A PMSM cannot be driven by commercial power. Be sure to use an inverter. **A failure could occur.**
Wiring	Be sure to match inverter's output terminals (U, V and W) with motor's input terminals (U, V and W).
Control mode	When F42 = 11 (V/f control for PMSM drive) At the start of driving the motor, the inverter flows current equivalent to 80% of the motor rated current (P03) to pull in the magnetic pole position for synchronization. After that, the inverter accelerates the motor to the reference frequency. No magnetic pole position detection function is provided. No auto search for an idling PMSM and restart function are provided. Depending upon the magnetic pole position, the motor may run in the reverse direction slightly at the start of running.
Speed control range	The speed control range is from 10% to 100% of the base frequency (F04). Set the reference frequency to 10% or more of the F04 data.
Motor constants	The following motor parameters are used, so consult the motor manufacturer and configure the correct values. No tuning function is provided. F03: Maximum Frequency 1 (Hz) F04: Base frequency (Hz) F05: Rated voltage at base frequency) (V) (When F05 = 0, the inverter acts as 200/400V setting.) F06: Maximum Output Voltage 1 (V) P03: Motor rated current (A) P60: Armature resistance (Ω) P61: d-axis inductance (mH) P62: q-axis inductance (mH) P63: Induced voltage (V) P90: Overcurrent protection level (A) If any of P60, P62 and P63 is set to "0.00," the inverter does not start. Be sure to set correct values. The factory defaults of P60 to P63 are "0.00." If motor parameters are not correct, the inverter cannot run normally. Set P90 to the value less than the demagnetizing current. **A failure could occur.**
Carrier frequency	The carrier frequency (F26) should be 2 to 16 kHz. Running a PMSM at 0.75 or 1 kHz may result in a failure due to demagnetization. The automatic carrier frequency lowering function at the time of inverter overheat does not work. **A failure could occur.**
2nd motor	A PMSM cannot be driven as the 2nd motor.

Item	Specifications
V/f pattern	Linear V/f pattern only. The load selection value (F37) will be ignored.
Auto energy saving	When driving a PMSM, the high-efficiency control is always ON.
Auto-tuning	A PMSM cannot be tuned.
Instantaneous overcurrent limiter	Not available for a PMSM. The H12 setting will be ignored. Even if H12 = 1, an overcurrent trip occurs due to an overcurrent incident.
Restart mode after momentary power failure	When the F14 data is set to either 4 or 5, the inverter restarts with pull-in by current.
Automatic deceleration (anti-regenerative control),	When H69 = 1, the automatic deceleration is performed only on inverters compatible with the original FRENIC-Mini series (FRN□□□C1□-□□). When H69 = 2 or 4, no automatic deceleration is performed.
Brake signal	Not available for a PMSM. It is always OFF.
Jogging operation	Not available for a PMSM.
DC braking	Not available for a PMSM.
Others	Be sure to consult the motor manufacturers before actual operation. A failure could occur.

Chapter 6 TROUBLESHOOTING

6.1 Before Proceeding with Troubleshooting

⚠WARNING⚠

If any of the protective functions has been activated, first remove the cause. Then, after checking that the all run commands are set to OFF, reset the alarm. If the alarm is released while any run command is set to ON, the inverter may supply the power to the motor, running the motor.

Injury may occur.

- Even though the inverter has interrupted power to the motor, if the voltage is applied to the main circuit power input terminals L1/R, L2/S and L3/T (L1/L and L2/N for single-phase voltage input), voltage may be output to inverter output terminals U, V, and W.
- Turn OFF the power and wait at least five minutes. Make sure that the LED monitor is turned OFF. Further, make sure, using a multimeter or a similar instrument, that the DC link bus voltage between the terminals P (+) and N (-) has dropped to the safe level (+25 VDC or below).

Electric shock may occur.

Follow the procedure below to solve problems.

(1) First, check that the inverter is correctly wired, referring to Chapter 2 Section 2.3.5 "Wiring for main circuit terminals and grounding terminals."

(2) Check whether an alarm code is displayed on the LED monitor.

- If no alarm code appears on the LED monitor
  - Abnormal motor operation → Go to Section 6.2.1
    - [1] The motor does not rotate.
    - [2] The motor rotates, but the speed does not increase.
    - [3] The motor runs in the opposite direction to the command.
    - [4] Speed fluctuation or current oscillation (e.g., hunting) occurs during running at constant speed.
    - [5] Grating sound is heard from the motor or the motor sound fluctuates.
    - [6] The motor does not accelerate or decelerate within the specified time.
    - [7] The motor does not restart even after the power recovers from a momentary power failure.
    - [8] The motor does not run as expected.
  - Problems with inverter settings → Go to Section 6.2.2
    - [1] Nothing appears on the LED monitor.
    - [2] The desired menu is not displayed.
    - [3] Data of function codes cannot be changed
- If an alarm code appears on the LED monitor → Go to Section 6.3
- If an abnormal pattern appears on the LED monitor while no alarm code is displayed → Go to Section 6.4

If any problems persist after the above recovery procedure, contact your Fuji Electric representative.

6.2 If No Alarm Code Appears on the LED Monitor

6.2.1 Abnormal motor operation

[1] The motor does not rotate.

Possible Causes	What to Check and Suggested Measures
(1) No power supplied to the inverter.	Check the input voltage, output voltage and interphase voltage unbalance. ➔ Turn ON a molded case circuit breaker (MCCB), a residual-current-operated protective device (RCD)/earth leakage circuit breaker (ELCB) (with overcurrent protection) or a magnetic contactor (MC). ➔ Check for voltage drop, phase loss, poor connections, or poor contacts, and fix them if necessary.
(2) No run forward/reverse command was inputted, or both the commands were inputted simultaneously (external signal operation).	Check the input status of the forward/reverse command with Menu #4 "I/O Checking" using the keypad. ➔ Input a run command. ➔ Set either the forward or reverse operation command to off if both commands are being inputted. ➔ Correct the assignment of commands ***FWD*** and ***REV*** to function codes E98 and E99. ➔ Connect the external circuit wires to control circuit terminals [FWD] and [REV] correctly. ➔ Make sure that the sink/source jumper switch on the printed circuit board (PCB) is properly configured.
(3) No indication of rotation direction (keypad operation).	Check the input status of the forward/reverse rotation direction command with Menu #4 "I/O Checking" using the keypad. ➔ Input the rotation direction (F02 = 0), or select the keypad operation with which the rotation direction is fixed (F02 = 2 or 3).
(4) The inverter could not accept any run commands from the keypad since it was in Programming mode.	Check which operation mode the inverter is in, using the keypad. ➔ Shift the operation mode to Running mode and enter a run command.
(5) A run command with higher priority than the one attempted was active, and the run command was stopped.	Refer to the block diagram of the drive command generator* and check the higher priority run command with Menu #2 "Data Checking" and Menu #4 "I/O Checking" using the keypad. *Refer to the FRENIC-Mini User's Manual, Chapter 4. ➔ Correct any incorrect function code data settings (H30) or cancel the higher priority run command.
(6) The reference frequency was below the starting or stop frequency.	Check that a frequency command has been entered correctly, using Menu #4 "I/O Checking" on the keypad. ➔ Set the frequency command to the same or higher than that of the starting and stop frequencies (F23 and F25). ➔ Reconsider the starting and stop frequencies (F23 and F25), and if necessary, change them to lower values. ➔ Inspect the external frequency command potentiometers, signal converters, switches, or relay contacts. Replace any ones that are faulty. ➔ Connect the external circuit wires correctly to terminals [13], [12], [11], and [C1].

Possible Causes	What to Check and Suggested Measures
(7) A frequency command with higher priority than the one attempted was active.	Check the higher priority run command with Menu #2 "Data Checking" and Menu #4 "I/O Checking" using the keypad, referring to the block diagram of the drive command generator*. *Refer to the FRENIC-Mini User's Manual, Chapter 4. ➔ Correct any incorrect function code data (e.g. cancel the higher priority run command).
(8) The upper and lower frequencies for the frequency limiters were set incorrectly.	Check the data of function codes F15 (Frequency limiter (High)) and F16 (Frequency limiter (Low)). ➔ Change the settings of F15 and F16 to the correct ones.
(9) The coast-to-stop command was effective.	Check the data of function codes E01 through E03, E98 and E99 and the input signal status, using Menu #4 "I/O Checking" on the keypad. ➔ Release the coast-to-stop command setting.
(10) Broken wire, incorrect connection or poor contact with the motor.	Check the wiring (Measure the output current). ➔ Repair the wires to the motor, or replace them.
(11) Overload	Measure the output current. ➔ Reduce the load (In winter, the load tends to increase.)
	Check that any mechanical brake is activated. ➔ Release the mechanical brake, if any.
(12) Torque generated by the motor was insufficient.	Check that the motor starts running if the value of torque boost (F09, A05) is increased. ➔ Increase the value of torque boost (F09, A05) and try to run the motor.
	Check the data of function codes F04, F05, H50 through H53, A02, and A03. ➔ Change the V/f pattern to match the motor's characteristics.
	Check that the motor switching signal (selecting motor 2 or 1) is correct and the data of function codes matches each motor. ➔ Correct the motor switching signal. ➔ Modify the function code data to match the connected motor.
	Check whether the reference frequency signal is below the slip-compensated frequency of the motor. ➔ Change the reference frequency signal so that it becomes higher than the slip-compensated frequency of the motor.
(13) Wrong connection or poor contact of DC reactor (DCR).	Check the wiring. ➔ Connect the DCR correctly. Repair or replace DCR wires.

[2] The motor rotates, but the speed does not increase.

Possible Causes	What to Check and Suggested Measures
(1) The maximum frequency currently specified was too low.	Check the data of function code F03 or A01 (Maximum frequency). ➔ Correct the F03 or A01 data.
(2) The data of frequency limiter currently specified was too low.	Check the data of function code F15 (Frequency limiter (High)). ➔ Correct the F15 data.
(3) The reference frequency currently specified was too low.	Check the signals for the frequency command entered via the analog input terminals, using Menu #4 "I/O Checking" on the keypad. ➔ Increase the reference frequency. ➔ Inspect the external frequency command potentiometers, signal converters, switches, or relay contacts. Replace any ones that are faulty. ➔ Connect the external circuit wires to terminals [13], [12], [11], and [C1] correctly.
(4) A frequency command (e.g., multistep frequency or via communications link) with higher priority than the one expected was active and its reference frequency was too low.	Check the data of the relevant function codes and what frequency commands are being received, through Menu #1 "Data Setting," Menu #2 "Data Checking" and Menu #4 "I/O Checking," on the keypad, referring to the block diagram of the drive frequency generator*. *Refer to the FRENIC-Mini User's Manual, Chapter 4. ➔ Correct any incorrect data of function code (e.g. cancel higher priority run commands, etc.).
(5) The acceleration time was too long or too short.	Check the data of function codes F07 and E10 (Acceleration time). ➔ Change the acceleration time to match the load.
(6) Overload	Measure the output current. ➔ Reduce the load (Adjust the dumper of the fan or the valve of the pump). (In winter, the load tends to increase.)
	Check whether any mechanical brake is activated. ➔ Release the mechanical brake.
(7) Mismatch with the characteristics of the motor.	If auto-torque boost or auto-energy saving operation is under way, check whether the data of P02, P03, P06, P07, and P08 (A16, A17, A20, A21, and A22) agrees with the parameters of the motor. ➔ Perform auto-tuning of the inverter for every motor to be used.
(8) The current limiting operation did not increase the output frequency.	Make sure that F43 (Current limiter (Mode selection)) is set to "2" and check the setting of F44 (Current limiter (Level)). ➔ Correct the data of F44. Or, if the current limiter operation is not needed, set F43 to "0" (disable).
	Decrease the value of torque boost (F09), then run the motor again and check if the speed increases. ➔ Adjust the value of the torque boost (F09).
	Check the data of function codes F04, F05, H50 through H53 to ensure that the V/f pattern setting is right. ➔ Match the V/f pattern values with the motor ratings.

Possible Causes	What to Check and Suggested Measures
(9) Bias and gain incorrectly set.	Check the data of function codes F18, C50, C32, C34, C37, and C39. ➔ Readjust the bias and gain to appropriate values.

[3] The motor runs in the opposite direction to the command.

Possible Causes	What to Check and Suggested Measures
(1) Wiring to the motor is incorrect.	Check the wiring to the motor. ➔ Connect terminals U, V, and W of the inverter to the U, V, and W terminals of the motor, respectively.
(2) Incorrect connection and settings for run commands and rotation direction command ***FWD*** and ***REV***.	Check the data of function codes E98 and E99 and the connection to terminals [FWD] and [REV]. ➔ Correct the data of the function codes and the connection.
(3) A run command (with fixed rotation direction) from the keypad is active, but the rotation direction setting is incorrect.	Check the data of function code F02 (Run command). ➔ Change the data of function code F02 to "2: (RUN) / (STOP) keys on keypad (forward)" or "3: (RUN) / (STOP) keys on keypad (reverse)."

[4] Speed fluctuation or current oscillation (e.g., hunting) occurs during running at constant speed.

Possible Causes	What to Check and Suggested Measures
(1) The frequency command fluctuates.	Check the signals for the frequency command with Menu #4 "I/O Checking" using the keypad. ➔ Increase the filter constants (C33, C38) for the frequency command.
(2) An external frequency command potentiometer is used.	Check that there is no noise in the control signal wires from external sources. ➔ Isolate the control signal wires from the main circuit wires as far as possible. ➔ Use shielded or twisted wires for control signals.
	Check whether the frequency command has not failed because of noise from the inverter. ➔ Connect a capacitor to the output terminal of the potentiometer or set a ferrite core on the signal wire. (See Figure 2.6.)
(3) Frequency switching or multistep frequency command was enabled.	Check whether the relay signal for switching the frequency command is chattering. ➔ If the relay contact is defective, replace the relay.

Possible Causes	What to Check and Suggested Measures
(4) The wiring length between the inverter and the motor is too long.	Check whether auto-torque boost or auto-energy saving operation is enabled. ➔ Perform auto-tuning of the inverter for every motor to be used. ➔ Select constant torque load (F37, A13 = 1) and check for any vibration. ➔ Make the output wires as short as possible.
(5) The machinery is hunting due to vibration caused by low rigidity of the load. Or the current is irregularly oscillating due to special motor parameters.	Once cancel all the automatic control systems--auto torque boost, auto energy saving operation, overload prevention control, current limiter, automatic deceleration (anti-regenerative control), and slip compensation, and then check that the motor vibration comes to a stop. ➔ Cancel the functions causing the vibration. ➔ Readjust the output current fluctuation damping gain (H80, A41).
	Check that the motor vibration is suppressed if you decrease the level of F26 (Motor sound (Carrier frequency)) or set F27 (Motor sound (Tone)) to "0." ➔ Decrease the carrier frequency (F26) or set the tone to "0" (F27 = 0).

[5] Grating sound is heard from the motor or the motor sound fluctuates.

Possible Causes	What to Check and Suggested Measures
(1) The specified carrier frequency is too low.	Check the data of function codes F26 (Motor sound (Carrier frequency)) and F27 (Motor sound (Tone)). ➔ Increase the carrier frequency (F26). ➔ Change the setting of F27 to appropriate value.
(2) The ambient temperature of the inverter was too high (when automatic lowering of the carrier frequency was enabled by H98).	Measure the temperature inside the panel where the inverter is mounted. ➔ If it is over 40°C, lower it by improving the ventilation. ➔ Lower the temperature of the inverter by reducing the load. (For fans or pumps, decrease the frequency limiter value (F15).) **Note:** If you disable H98, an OH1 or OLU alarm may occur.
(3) Resonance with the load	Check the machinery mounting accuracy or check whether there is resonance with the mounting base. ➔ Disconnect the motor from the machinery and run it alone, then find where the resonance comes from. Upon locating the cause, improve the characteristics of the source of the resonance. ➔ Adjust the settings of C01 (Jump frequency 1) to C04 (Jump frequency (Hysteresis width)) so as to avoid continuous running in the frequency range causing resonance.

[6] The motor does not accelerate or decelerate within the specified time.

Possible Causes	What to Check and Suggested Measures
(1) The inverter ran the motor with S-curve or curvilinear pattern.	Check the data of function code H07 (Acceleration/deceleration pattern). ➔ Select the linear pattern (H07 = 0). ➔ Shorten the acceleration/deceleration time (F07, F08, E10 and E11).
(2) The current limiting operation prevented the output frequency from increasing (during acceleration).	Make sure that F43 (Current limiter (Mode selection)) is set to "2: Enable during acceleration and at constant speed," then check that the setting of F44 (Current limiter (Level)) is reasonable. ➔ Readjust the setting of F44 to an appropriate value, or disable the function of current limiter with F43. ➔ Increase the acceleration/deceleration time (F07, F08, E10 and E11).
(3) The automatic deceleration (Anti-regenerative control) is enabled during deceleration.	Check the data of function code H69 (Automatic deceleration (Mode selection)). ➔ Increase the deceleration time (F08 and E11).
(4) Overload.	Measure the output current. ➔ Reduce the load (For fans or pumps, decrease the frequency limiter value (F15).) (In winter, the load tends to increase.).
(5) Torque generated by the motor was insufficient.	Check that the motor starts running if the value of the torque boost (F09, A05) is increased. ➔ Increase the value of the torque boost (F09, A05).
(6) An external potentiometer is used for frequency setting.	Check that there is no noise in the control signal wires from external sources. ➔ Isolate the control signal wires from the main circuit wires as far as possible. ➔ Use shielded or twisted wires for control signals. ➔ Connect a capacitor to the output terminal of the external frequency potentiometer or set a ferrite core on the signal wire. (See Figure 2.6.)
(7) The specified acceleration/deceleration time is incorrect.	Check the terminal command ***RT1*** ("Select ACC/DEC time"). ➔ Correct the ***RT1*** setting.

[7] The motor does not restart even after the power recovers from a momentary power failure.

Possible Causes	What to Check and Suggested Measures
(1) The data of function code F14 is either "0" or "1."	Check if an undervoltage trip (LU) occurs. ➔ Change the data of function code F14 (Restart mode after momentary power failure (Mode selection)) to "4" or "5."
(2) The run command remains OFF even after the power has been restored.	Check the input signal with Menu #4 "I/O Checking" using the keypad. ➔ Check the power recovery sequence with an external circuit. If necessary, consider the use of a relay that can keep the run command ON.
	In 3-wire operation, the power to the inverter's control PCB has been shut down once because of a long momentary power failure, or, the ***HLD*** terminal command ("Enable 3-wire operation") has been turned OFF once. ➔ Change the design or the setting so that a run command can be issued again within 2 seconds after power has been restored.

[8] The motor does not run as expected.

Possible Causes	What to Check and Suggested Measures
(1) Incorrect configuration of function codes	Check that function codes are correctly configured and no unnecessary configuration has been made. ➔ Configure all function codes correctly.
	Make a note of function code data currently configured and then initialize all function code data (H03). ➔ After initialization, reconfigure the necessary function codes one by one, checking the running status of the motor.

6.2.2 Problems with inverter settings

[1] Nothing appears on the LED monitor.

Possible Causes	What to Check and Suggested Measures
(1) No power supplied to the inverter.	Check the input voltage, output voltage and interphase voltage unbalance. ➔ Turn ON a molded case circuit breaker (MCCB), a residual-current-operated protective device (RCD)/earth leakage circuit breaker (ELCB) (with overcurrent protection) or a magnetic contactor (MC). ➔ Check for voltage drop, phase loss, poor connections, or poor contacts, and fix them if necessary.
(2) The power for the control PCB did not reach a sufficiently high level.	Check if the jumper bar has been removed between terminals P1 and P(+) or if there is poor contact between the jumper bar and the terminals. ➔ Mount a jumper bar or DC reactor between terminals P1 and P(+). For poor contact, tighten up the screws.

[2] The desired menu is not displayed.

Possible Causes	Check and Measures
(1) The menu display mode is not selected appropriately.	Check the data of function code E52 (Keypad (Menu display mode)). ➔ Change the E52 data so that the desired menu appears.

[3] Data of function codes cannot be changed.

Possible Causes	What to Check and Suggested Measures
(1) An attempt was made to change function code data that cannot be changed when the inverter is running.	Check if the inverter is running with Menu #3 "Drive Monitoring" using the keypad and then confirm whether the data of the function codes can be changed when the motor is running, referring to the function code tables. ➔ Stop the motor then change the data of the function codes.
(2) The data of the function codes is protected.	Check the data of function code F00 (Data protection). ➔ Change the F00 data from "Enable data protection" ("1" or "3") to "Disable data protection" ("0" or "2").
(3) The ***WE-KP*** terminal command ("Enable data change with keypad") is not entered though it has been assigned to a digital input terminal.	Check the data of function codes E01 through E03, E98 and E99 and the input signals with Menu #4 "I/O Checking" using the keypad. ➔ Input a ***WE-KP*** command through a digital input terminal.
(4) The FUNC/DATA key was not pressed.	Check whether you have pressed the FUNC/DATA key after changing the function code data. ➔ Press the FUNC/DATA key after changing the function code data.
(5) The data of function codes F02, E01 through E03, E98, and E99 cannot be changed.	Either one of the ***FWD*** and ***REV*** terminal commands is ON. ➔ Turn OFF both ***FWD*** and ***REV***.
(6) The DC link bus voltage has dropped below the undervoltage detection level.	Using Menu #5 "Maintenance Information" on the keypad, check the DC link bus voltage and measure the input voltage. ➔ Connect the inverter to a power supply that meets its input specifications.

6.3 If an Alarm Code Appears on the LED Monitor

■ Quick reference table of alarm codes

Alarm code	Name	Refer to	Alarm code	Name	Refer to
OC 1	Instantaneous overcurrent	6-10	dbH	Braking resistor overheated	6-16
OC2			OL 1 OL2	Motor 1 overload Motor 2 overload	6-17
OC3			OLU	Inverter overload	6-17
OU 1	Overvoltage	6-11	Er 1	Memory error	6-18
OU2			Er-2	Keypad communications error	6-19
OU3			Er-3	CPU error	6-19
LU	Undervoltage	6-12	Er-5	Operation protection	6-19
L in	Input phase loss	6-13	Er 7	Tuning error	6-20
OPL	Output phase loss	6-14	Er-8	RS-485 communications error	6-21
OH 1	Heat sink overheat	6-14	Er-F	Data saving error during undervoltage	6-22
OH2	External alarm	6-15	Err	Mock alarm	6-22
OH4	Motor protection (PTC thermistor)	6-15	CoF	PID feedback wire break	6-23
			Er-d	Step-out detection (for drive of permanent magnet synchronous motors)	6-23

[1] OCn Instantaneous overcurrent

Problem The inverter momentary output current exceeded the overcurrent level.

- OC 1 Overcurrent occurred during acceleration.
- OC2 Overcurrent occurred during deceleration.
- OC3 Overcurrent occurred during running at a constant speed.

Possible Causes	What to Check and Suggested Measures
(1) The inverter output lines were short-circuited.	Disconnect the wiring from the inverter output terminals ([U], [V], and [W]) and measure the interphase resistance of the motor wiring. Check if the resistance is too low. ➔ Remove the short-circuited parts (including replacement of the wires, relay terminals and motor).
(2) Ground faults have occurred at the inverter output lines.	Disconnect the wiring from the inverter output terminals ([U], [V], and [W]) and perform a Megger test. ➔ Remove the grounded parts (including replacement of the wires, relay terminals and motor).

Possible Causes	What to Check and Suggested Measures
(3) Loads were too heavy.	Measure the motor current with a measuring device to trace the current trend. Then, use this data to judge if the trend is over the calculated load value for your system design. ➔If the load is too heavy, reduce it or raise the inverter capacity.
	Trace the current trend and check if there are any sudden changes in the current. ➔ If there are any sudden changes, make the load fluctuation smaller or raise the inverter capacity. ➔ Enable instantaneous overcurrent limiting (H12 = 1).
(4) Excessive torque boost specified. (when F37, A13 = 0, 1, 3 or 4)	Check whether decreasing the torque boost (F09, A05) reduces the output current but does not stall the motor. ➔ If no stall occurs, decrease the torque boost (F09, A05).
(5) Acceleration/ deceleration time currently specified is too short.	Recalculate the acceleration/deceleration torque and time needed for the current load, based on the moment of inertia of the load and the acceleration/deceleration time. ➔ Increase the acceleration/deceleration time (F07, F08, E10, E11). ➔ Enable current limiter (F43) ➔ Raise the inverter capacity.
(6) Malfunction caused by noise.	Check if noise control measures are appropriate (e.g., correct grounding and routing of control and main circuit wires). ➔ Implement noise control measures. For details, refer to the FRENIC-Mini User's Manual, "Appendix A." ➔ Enable the Auto-reset (H04). ➔ Connect a surge absorber to magnetic contactor's coils or other solenoids (if any) causing noise.

[2] 0Uh Overvoltage

Problem The DC link bus voltage was over the detection level of overvoltage.

- 0U1 Overvoltage occurs during the acceleration.
- 0U2 Overvoltage occurs during the deceleration.
- 0U3 Overvoltage occurs during running at constant speed.

Possible Causes	What to Check and Suggested Measures
(1) The power supply voltage exceeded the inverter's specification range.	Measure the input voltage. ➔ Decrease the voltage to within the specified range.
(2) A surge current entered the input power supply.	In the same power line, if a phase-advancing capacitor is turned ON/OFF or a thyristor converter is activated, a surge (momentary large increase in the voltage or current) may be caused in the input power. ➔ Install a DC reactor.

Possible Causes	What to Check and Suggested Measures
(3) The specified deceleration time was too short for the moment of inertia of the load.	Recalculate the deceleration torque based on the moment of inertia of the load and the deceleration time. ➔ Increase the deceleration time (F08, E11). ➔ Enable the automatic deceleration (anti-regenerative control) (H69 = 2 or 4), or deceleration characteristics (H71 = 1). ➔ Set the rated voltage (at base frequency) (F05, A03) to "0" to improve the braking capability.
(4) The specified acceleration time was too short.	Check if the overvoltage alarm occurs after rapid acceleration. ➔ Increase the acceleration time (F07, E10). ➔ Select the S-curve pattern (H07).
(5) Braking load was too heavy.	Compare the braking torque of the load with that of the inverter. ➔ Set the rated voltage (at base frequency) (F05, A03) to "0" to improve the braking capability.
(6) Malfunction caused by noise.	Check if the DC link bus voltage was below the protective level when the overvoltage alarm occurred. ➔ Implement noise control measures. For details, refer to the FRENIC-Mini User's Manual, "Appendix A." ➔ Enable the auto-reset (H04). ➔ Connect a surge absorber to magnetic contactor's coils or other solenoids (if any) causing noise.

[3] LU Undervoltage

Problem DC link bus voltage has dropped below the undervoltage detection level.

Possible Causes	What to Check and Suggested Measures
(1) A momentary power failure occurred.	➔ Reset the alarm. ➔ To restart the motor without treating this condition as an alarm, set F14 to "4" or "5," depending on the load type.
(2) The power to the inverter was switched back to ON too soon (when F14 = 1).	Check if the power to the inverter was switched back to ON while the control power was still alive. (Check whether the LEDs on the keypad light.) ➔ Switch the power ON again after all LEDs on the keypad go off.
(3) The power supply voltage did not reach the inverter's specification range.	Measure the input voltage. ➔ Increase the voltage to within the specified range.
(4) Peripheral equipment for the power circuit malfunctioned, or the connection was incorrect.	Measure the input voltage to find which peripheral equipment malfunctioned or which connection is incorrect. ➔ Replace any faulty peripheral equipment, or correct any incorrect connections.

Possible Causes	What to Check and Suggested Measures
(5) Any other load(s) connected to the same power supply has required a large starting current, causing a temporary voltage drop.	Measure the input voltage and check the voltage fluctuation. ➔ Reconsider the power system configuration.
(6) Inverter's inrush current caused the power voltage drop because the power supply transformer capacity was insufficient.	Check if the alarm occurs when a molded case circuit breaker (MCCB), residual-current-operated protective device (RCD)/earth leakage circuit breaker (ELCB) (with overcurrent protection) or magnetic contactor (MC) is turned ON. ➔Reconsider the capacity of the power supply transformer.

[4] Lin Input phase loss

Problem Input phase loss occurred, or interphase voltage unbalance rate was large.

Possible Causes	What to Check and Suggested Measures
(1) Main circuit power input wires broken.	Measure the input voltage. ➔ Repair or replace the input wires.
(2) Screws on the main circuit power input terminals are loose.	Check if the screws on the inverter input terminals have become loose. ➔ Tighten the terminal screws to the recommended torque.
(3) Interphase voltage unbalance between three phases was too large.	Measure the input voltage. ➔ Connect an AC reactor (ACR) to lower the voltage unbalance between input phases. ➔ Raise the inverter capacity.
(4) Overload cyclically occurred.	Measure the ripple wave of the DC link bus voltage. ➔ If the ripple is large, raise the inverter capacity.
(5) Single-phase voltage was input to the three-phase input inverter.	Check the inverter type. ➔ Apply three-phase power. The FRENIC-Mini of three-phase input cannot be driven by single-phase power supply.

Note The input phase loss protection can be disabled with the function code H98 (Protection/ Maintenance Function).

[5] OPL Output phase loss

Problem Output phase loss occurred.

Possible Causes	What to Check and Suggested Measures
(1) Inverter output wires are broken.	Measure the output current. ➔ Replace the output wires.
(2) The motor winding is broken.	Measure the output current. ➔ Replace the motor.
(3) Screws on the main circuit power input terminals are loose.	Check if the screws on the inverter output terminals have become loose. ➔ Tighten the terminal screws to the recommended torque.
(4) A single-phase motor has been connected.	➔ Single-phase motors cannot be used. Note that the FRENIC-Mini only drives three-phase induction motors.

[6] OH / Heat sink overheat

Problem Temperature around the heat sink has risen abnormally.

Possible Causes	What to Check and Suggested Measures
(1) Temperature around the inverter exceeded the inverter's specification range.	Measure the temperature around the inverter. ➔ Lower the temperature around the inverter (e.g., ventilate the panel where the inverter is mounted).
(2) Ventilation path is blocked.	Check if there is sufficient clearance around the inverter. ➔ Change the mounting place to ensure the clearance.
	Check if the heat sink is not clogged. ➔ Clean the heat sink.
(3) Service life of cooling fan has expired or cooling fan is faulty.	Check the cumulative run time of the cooling fan. Refer to Chapter 3, Section 3.4.5 "Reading maintenance information – "Maintenance Information"." ➔ Replace the cooling fan.
	Visually check whether the cooling fan rotates normally. ➔ Replace the cooling fan.
(4) Load was too heavy.	Measure the output current. ➔ Reduce the load (e.g. Use the overload early warning (E34) to reduce the load before the overload protection is activated.). (In winter, the load tends to increase.) ➔ Decease the motor sound (Carrier frequency) (F26). ➔ Enable the overload prevention control (H70).

[7] 0H2 External alarm

Problem External alarm was inputted (***THR***).
(when ***THR*** ("Enable external alarm trip") is assigned to any of digital input terminals [X1] through [X3], [FWD], and [REV])

Possible Causes	What to Check and Suggested Measures
(1) An alarm function of external equipment was activated.	Check the operation of external equipment. ➔ Remove the cause of the alarm that occurred.
(2) Wrong connection or poor contact in external alarm signal wiring.	Check if the external alarm signal wiring is correctly connected to the terminal to which the ***THR*** terminal command ("Enable external alarm trip") has been assigned (Any of E01 through E03, E98, and E99 should be set to "9."). ➔ Connect the external alarm signal wire correctly.
(3) Incorrect setting of function code data.	Check if the ***THR*** terminal command ("Enable external alarm trip") has been assigned to an unavailable terminal (with E01 through E03, E98, or E99). ➔ Correct the assignment.
	Check whether the normal/negative logic of the external signal matches that of the ***THR*** terminal command specified by any of E01 through E03, E98 and E99. ➔ Ensure the matching of the normal/negative logic.

[8] 0H4 Motor protection (PTC thermistor)

Problem Temperature of the motor has risen abnormally.

Possible Causes	What to Check and Suggested Measures
(1) The temperature around the motor exceeded the motor's specification range.	Measure the temperature around the motor. ➔ Lower the temperature.
(2) Cooling system for the motor defective.	Check if the cooling system of the motor is operating normally. ➔ Repair or replace the cooling system of the motor.
(3) Load was too heavy.	Measure the output current. ➔ Reduce the load (e.g. Use the overload early warning (E34) to reduce the load before the overload protection is activated.). (In winter, the load tends to increase.) ➔ Lower the temperature around the motor. ➔ Increase the motor sound (Carrier frequency) (F26).
(4) The activation level (H27) of the PTC thermistor for motor overheat protection was set inadequately.	Check the thermistor specifications and recalculate the detection voltage. ➔ Modify the data of function code H27.
(5) Connections and resistance values of the PTC thermistor and pull-up resistor are not appropriate.	Check the connections and the resistance value. ➔ Correct the connections and replace the resistor with the one having an appropriate resistance.

Possible Causes	What to Check and Suggested Measures
(6) Excessive torque boost specified. (F09, A05)	Check whether decreasing the torque boost (F09, A05) does not stall the motor. ➔ If no stall occurs, decrease the torque boost (F09, A05).
(7) The V/f pattern did not match the motor.	Check if the base frequency (F04, A02) and the rated voltage at base frequency (F05, A03) match the values on the motor's nameplate. ➔ Match the function code data to the values on the motor's nameplate.
(8) Incorrect setting of function code data.	Although no PTC thermistor is used, the thermistor mode is enabled (H26). ➔ Set the H26 data to "0" (Disable).

[9] dbH Braking resistor overheated

Problem The electronic thermal protection for the braking resistor has been activated.

Possible Causes	What to Check and Suggested Measures
(1) Braking load is too heavy.	Reconsider the relationship between the braking load estimated and the real load. ➔ Lower the real braking load. ➔ Review the performance of the current braking resistor and increase the braking capability. (Modification of related function code data (F50 and F51) is also required.)
(2) The specified deceleration time was too short.	Recalculate the deceleration torque and time needed for the current load, based on the moment of inertia of the load and the deceleration time. ➔ Increase the deceleration time (F08, E11). ➔ Review the performance of the current braking resistor and increase the braking capability. (Modification of related function code data (F50 and F51) is also required.)
(3) Incorrect setting of function code data F50 and F51.	Recheck the specifications of the braking resistor. ➔ Review the data of function codes F50 and F51, then reconfigure them.

Note: The inverter issues an overheat alarm of the braking resistor by monitoring the magnitude of the braking load, not by measuring its surface temperature.

When the braking resistor is frequently used so as to exceed the settings made by function codes F50 and F51, therefore, the inverter issues an overheat alarm even if the surface temperature of the braking resistor does not rise. To squeeze out full performance of the braking resistor, configure function codes F50 and F51 while actually measuring the surface temperature of the braking resistor.

[10] OL1 / Motor 1 overload
OL2 Motor 2 overload

Problem Electronic thermal protection for motor 1 or motor 2 activated.

Possible Causes	What to Check and Suggested Measures
(1) The electronic thermal characteristics do not match the motor overload characteristics.	Check the motor characteristics. ➔ Reconsider the data of function codes (P99, F10 and F12) or (A39, A06 and A08). ➔ Use an external thermal relay.
(2) Activation level for the electronic thermal protection was inadequate.	Check the continuous allowable current of the motor. ➔ Reconsider and change the data of function code F11 or A07.
(3) The specified acceleration/ deceleration time was too short.	Recalculate the acceleration/deceleration torque and time needed for the current load, based on the moment of inertia of the load and the acceleration/deceleration time. ➔ Increase the acceleration/deceleration time (F07, F08, E10, E11).
(4) Load was too heavy.	Measure the output current. ➔ Reduce the load (e.g. Use the overload early warning (E34) to reduce the load before the overload protection is activated.). (In winter, the load tends to increase.)

[11] OLU Inverter overload

Problem Temperature inside inverter has risen abnormally.

Possible Causes	What to Check and Suggested Measures
(1) Temperature around the inverter exceeded the inverter's specification range.	Measure the temperature around the inverter. ➔ Lower the temperature (e.g., ventilate the panel where the inverter is mounted).
(2) Excessive torque boost specified. (F09, A05)	Check whether decreasing the torque boost (F09, A05) does not stall the motor. ➔ If no stall occurs, decrease the torque boost (F09, A05).
(3) The specified acceleration/ deceleration time was too short.	Recalculate the acceleration/deceleration torque and time needed for the current load, based on the moment of inertia of the load and the acceleration/deceleration time. ➔ Increase the acceleration/deceleration time (F07, F08, E10, E11).
(4) Load was too heavy.	Measure the output current. ➔ Reduce the load (e.g. Use the overload early warning (E34) to reduce the load before the overload protection is activated.). (In winter, the load tends to increase.) ➔ Decrease the motor sound (Carrier frequency) (F26). ➔ Enable overload prevention control (H70).

Possible Causes	What to Check and Suggested Measures
(5) Ventilation paths are blocked.	Check if there is sufficient clearance around the inverter. ➔ Ensure the clearance.
	Check if the heat sink is not clogged. ➔ Clean the heat sink.
(6) Service life of cooling fan has expired or cooling fan is faulty.	Check the cumulative run time of the cooling fan. Refer to Chapter 3, Section 3.4.5 "Reading maintenance information – "Maintenance Information"." ➔ Replace the cooling fan.
	Visually check whether the cooling fan rotates normally. ➔ Replace the cooling fan.
(7) The wires to the motor are too long, causing a large leakage current from them.	Measure the leakage current. ➔ Insert an output circuit filter (OFL).

[12] Er 1 **Memory error**

Problem Error occurred in writing data to the inverter memory.

Possible Causes	What to Check and Suggested Measures
(1) During writing of function code data (especially during initialization or data copying), the inverter was shut down so that the voltage to the control PCB has dropped.	Initialize the function code data with H03 (= 1). After initialization, check if pressing the PRG/RESET key resets the alarm. ➔ Revert the initialized function code data to their previous settings, then restart the operation.
(2) Inverter affected by strong electrical noise when writing data (especially initializing or copying data).	Check if appropriate noise control measures have been implemented (e.g., correct grounding and routing of control and main circuit wires). Also, perform the same check as described in (1) above. ➔ Implement noise control measures. Revert the initialized function code data to their previous settings, then restart the operation.
(3) Any error in control circuit.	Initialize the function code data by setting H03 to "1," then reset the alarm by pressing the PRG/RESET key and check that the alarm goes on. ➔ The control PCB (on which the CPU is mounted) is defective. Contact your Fuji Electric representative.

[13] Er2 Keypad communications error

Problem A communications error occurred between the remote keypad (option) and the inverter.

Possible Causes	What to Check and Suggested Measures
(1) Broken communications cable or poor contact.	Check continuity of the cable, contacts and connections. ➔ Re-insert the connector firmly. ➔ Replace the cable.
(2) Inverter affected by strong electrical noise.	Check if appropriate noise control measures have been implemented (e.g., correct grounding and routing of control and main circuit wires). ➔ Implement noise control measures. For details, refer to the FRENIC-Mini User's Manual, "Appendix A."
(3) The remote keypad (option) defective.	Replace the keypad with another one and check whether a keypad communications error (Er2) no longer occurs. ➔ Replace the keypad.

[14] Er3 CPU error

Problem A CPU error (e.g. erratic CPU operation) occurred.

Possible Causes	What to Check and Suggested Measures
(1) Inverter affected by strong electrical noise.	Check if appropriate noise control measures have been implemented (e.g. correct grounding and routing of control and main circuit wires and communications cable). ➔ Implement noise control measures.

[15] Er6 Operation protection

Problem An incorrect operation was attempted.

Possible Causes	What to Check and Suggested Measures
(1) The STOP key was pressed when H96 = 1 or 3.	Check if the STOP key was pressed when a run command had been entered from the input terminal or through the communications link. ➔ If this was not intended, check the setting of H96.
(2) The start check function was activated when H96 = 2 or 3.	Check if any of the following operations has been performed with a run command being entered. - Turning the power ON - Resetting the alarm - Switching the enable communications link ***LE*** operation ➔ Review the running sequence to avoid input of a run command when this error occurs. If this was not intended, check the setting of H96. (Turn the run command OFF before resetting the alarm.)

[16] Er 7 Tuning error

Problem Auto-tuning failed.

Possible Causes	What to Check and Suggested Measures
(1) A phase was missing (There was a phase loss) in the connection between the inverter and the motor.	➔ Properly connect the motor to the inverter.
(2) V/f or the rated current of the motor was not properly set.	Check whether the data of function codes matches the motor specifications. Motor 1: F04, F05, H50 through H53, P02, and P03 Motor 2: A02, A03, A16, and A17
(3) The wiring length between the inverter and the motor was too long.	Check whether the wiring length between the inverter and the motor exceeds 50 m. ➔ Review, and if necessary, change the layout of the inverter and the motor to shorten the connection wire. Alternatively, minimize the wiring length without changing the layout. ➔ Disable both auto-tuning and auto-torque boost (Set the data of F37 or A13 to "1").
(4) The rated capacity of the motor was significantly different from that of the inverter.	Check whether the rated capacity of the motor is three or more ranks lower, or two or more ranks higher than that of the inverter. ➔ Replace the inverter with one with an appropriate capacity. ➔ Manually specify the values for the motor parameters P06, P07 and P08 or A20, A21 and A22. ➔ Disable both auto-tuning and auto-torque boost (Set the data of F37 or A13 to "1").
(5) The motor is a special type such as a high-speed motor.	➔ Disable both auto-tuning and auto-torque boost (Set the data of F37 or A13 to "1").
(6) A tuning operation involving motor rotation (P04 or A18 = 2) was attempted while the brake was applied to the motor.	➔ Specify the tuning that does not involve the motor rotation (P04 or A18 = 1). ➔ Release the brake before tuning that involves the motor rotation (P04 or A18 = 2).

📖 For details of tuning errors, refer to Chapter 4, Section 4.1.3 "Preparation before a test run--Configuring function code data, ■ Tuning errors."

[17] Er8 RS-485 communications error

Problem A communications error occurred during RS-485 communication.

Possible Causes	What to Check and Suggested Measures
(1) Communications conditions of the inverter do not match that of the host equipment.	Compare the settings of the y codes (y01 to y10) with those of the host equipment. ➔ Correct any mismatch.
(2) Even though no-response error detection time (y08) has been set, communications is not performed within the specified cycle.	Check the host equipment. ➔ Change the settings of host equipment software or disable the no-response error detection (y08 = 0).
(3) The host equipment (e.g., PLCs and computers) did not operate due to incorrect settings or software/hardware defective.	Check the host equipment. ➔ Remove the cause of the equipment error.
(4) RS-485 converter did not operate due to incorrect connections or settings, or defective hardware.	Check the RS-485 converter (e.g., check for poor contact). ➔ Change the various RS-485 converter settings, reconnect the wires, or replace hardware with recommended devices as appropriate.
(5) Broken communications cable or poor contact.	Check the continuity of the cable, contacts and connections. ➔ Replace the cable.
(6) Inverter affected by strong electrical noise.	Check if appropriate noise control measures have been implemented (e.g., correct grounding and routing of control and main circuit wires). ➔ Implement noise control measures. ➔ Implement noise reduction measures at the host side. ➔ Replace the RS-485 converter with a recommended insulated one.

[18] Err Data saving error during undervoltage

Problem The inverter failed to save data such as the frequency commands, PID commands, timer values for timer operation (which are specified through the keypad) or the output frequencies modified by the ***UP***/***DOWN*** terminal commands when the power was switched OFF.

Possible Causes	What to Check and Suggested Measures
(1) During data saving performed when the power was turned OFF, the voltage fed to the control PCB dropped in an abnormally short period due to the rapid discharge of the DC link bus.	Check how long it takes for the DC link bus voltage to drop to the preset voltage when the power is turned OFF. ➔ Remove whatever is causing the rapid discharge of the DC link bus voltage. After pressing the PRG/RESET key and resetting the alarm, revert the data of the relevant function codes (such as the frequency commands, PID commands, timer values for timer operation (specified through the keypad) or the output frequencies modified by the ***UP***/***DOWN*** terminal commands) back to the original values and then restart the operation.
(2) Inverter affected by strong electrical noise during data saving performed when the power was turned OFF.	Check if appropriate noise control measures have been implemented (e.g., correct grounding and routing of control and main circuit wires). ➔ Implement noise control measures. After pressing the PRG/RESET key and resetting the alarm, revert the data of the relevant function codes (such as the frequency commands, PID commands, timer values for timer operation (specified through the keypad) or the output frequencies modified by the ***UP***/***DOWN*** terminal commands) back to the original values and then restart the operation.
(3) The control circuit failed.	Check if Er-F occurs each time power is switched ON. ➔ The control PCB (on which the CPU is mounted) is defective. Contact your Fuji Electric representative.

[19] Err Mock alarm

Problem The LED displays the alarm Err.

Possible Causes	What to Check and Suggested Measures
(1) Data of the function code H45 has been set to "1."	This setting makes the inverter issue a mock alarm. Use this to check out the sequence related to an alarm occurrence. ➔ To escape from this alarm state, press the PRG/RESET key.

[20] CoF PID feedback wire break

Problem The PID feedback wire is broken.

Possible Causes	What to Check and Suggested Measures
(1) The PID feedback signal wire is broken.	Check whether the PID feedback signal wires are connected correctly. ➔ Check whether the PID feedback signal wires are connected correctly. Or, tighten up the related terminal screws. ➔ Check whether any contact part bites the wire sheath.
(2) PID feedback related circuit affected by strong electrical noise.	Check if appropriate noise control measures have been implemented (e.g., correct grounding and routing of signal wires, communication cables, and main circuit wires). ➔ Improve the noise control measures. ➔ Separate the signal wires from main power wires as far as possible.

[21] Erd Step-out detection (for drive of permanent magnet synchronous motors)

Problem The step-out of the PMSM was detected.

Possible Causes	What to Check and Suggested Measures
(1) Mismatch with the characteristics of the motor.	Check whether the settings of F04, F05, P02, P03, P60, P61, P62, P63 agree with the motor parameters. ➔ Set the motor parameters to those function codes.
(2) Starting torque was insufficient.	Check the settings of the acceleration time (F07, E10) and the reference current at starting (P74). ➔ Change the acceleration time to match the load. ➔ Increase the reference current value at starting. ➔ Set the holding time of the starting frequency 1 (F24). ➔ Set the S-curve (H07 = 1 or 2). ➔ Increase the control switching level (P89).
(3) Load is light.	Check the setting of the reference current at starting (P74). ➔ Decrease the reference current value at starting. Set it to 80% or lower when running a motor alone in a test run etc.
(4) Control system not stabilized.	Check the settings of the armature resistance of PMSM (P60) and the V/f damping control compensation gain (P91, P92). ➔ Adjust the armature resistance of the motor. ➔ Adjust the settings of the compensation gain (P91, P92).

6.4 If an Abnormal Pattern Appears on the LED Monitor while No Alarm Code is Displayed

[1] – – – – (center bar) appears

Problem A center bar (– – – –) has appeared on the LED monitor.

Possible Causes	What to Check and Suggested Measures
(1) When the PID command and its feedback amount are selected as a monitor item, the PID control is disabled.	To view other monitor items: Check if E43 = 10 (PID command) or 12 (PID feedback amount). ➔ Set E43 to a value other than "10" or "12." To view a PID command or its feedback amount: Check if the PID control is disabled (J01 = 0). ➔ Set J01 to "1" (Enable process control, normal operation) or "2" (Enable process control, inverse operation).
(2) When timer operation is disabled (C21 = 0), timer is selected as a monitor item (E43 = 13). When timer operation had been enabled (C21 = 1) and timer had been selected as a monitor item by pressing the FUNC/DATA key, you disabled timer operation (C21 = 0).	To view other monitor items: Check if E32 = 13 (Timer). ➔ Set E43 to a value other than "13." To view timer (s): Check if C21 = 0 (Disable). ➔ Set C21 to "1."
(3) The remote keypad (option) was poorly connected.	Prior to proceeding, check that pressing the FUNC/DATA key does not change the display on the LED monitor. Check continuity of the extension cable for the keypad used in remote operation. ➔ Replace the extension cable. Check the RJ-45 connector for damage. ➔ Ensure the connector of the RJ-45 connector. ➔ Replace the remote keypad (option).

[2] _ _ _ _ (under bar) appears

Problem Although you pressed the RUN key or entered a run forward command ***FWD*** or a run reverse command ***REV***, the motor did not start and an under bar (_ _ _ _) appeared on the LED monitor.

Possible Causes	What to Check and Suggested Measures
(1) The DC link bus voltage was low.	Select 5_07 under Menu #5 "Maintenance Information" in Programming mode on the keypad, then check the DC link bus voltage that should be 200 VDC or below for three-phase 200 V class series and 400 VDC or below for three-phase 400 V class series. ➔ Connect the inverter to a power supply that meets its input specifications.

[3] [ ] appears

Problem Parentheses ([ ]) appeared on the LED monitor during speed monitoring on the keypad.

Possible Causes	What to Check and Suggested Measures
(1) The display data overflows the LED monitor.	Check whether the product of the output frequency and the display coefficient (E50) exceeds 9999. ➔ Correct the setting of E50.

Chapter 7 MAINTENANCE AND INSPECTION

Perform daily and periodic inspection to avoid trouble and keep reliable operation of the inverter for a long time. When performing inspections, follow the instructions given in this chapter.

⚠WARNING⚠

- Before proceeding to the maintenance and inspection, turn OFF the power and wait at least five minutes. Make sure that the LED monitor is turned OFF. Further, make sure, using a multimeter or a similar instrument, that the DC link bus voltage between the terminals P(+) and N(-) has dropped below the safe level (+25 VDC or below).
  Electric shock may occur.
- Maintenance, inspection, and parts replacement should be made only by authorized persons.
- Take off the watch, rings and other metallic objects before starting work.
- Use insulated tools.
- Never modify the inverter.
  Electric shock or injuries could occur.

7.1 Daily Inspection

Visually inspect the inverter for operation errors from the outside without removing the covers when the inverter is ON or operating.

- Check that the expected performance (satisfying the standard specifications) is obtained.
- Check that the surrounding environment satisfies the requirements given in Chapter 2, Section 2.1 "Operating Environment."
- Check that the LED monitor on the keypad displays normally.
- Check for abnormal noise, odor, or excessive vibration.
- Check for traces of overheat, discoloration and other defects.

7.2 Periodic Inspection

Perform periodic inspection according to the items listed in Table 7.1. Before performing periodic inspection, be sure to stop the motor, shut down the power to the inverter, and then remove the terminal block covers.

Table 7.1 List of Periodic Inspections

Check part	Check item	How to inspect	Evaluation criteria
Environment	1) Check the ambient temperature, humidity, vibration and atmosphere (dust, gas, oil mist, or water drops). 2) Check that tools or other foreign materials or dangerous objects are not left around the equipment.	1) Check visually or measure using apparatus. 2) Visual inspection	1) The standard specification must be satisfied. 2) No foreign or dangerous objects are left.
Voltage	Check that the input voltages of the main and control circuit are correct.	Measure the voltages using a multimeter or the like.	The standard specifications must be satisfied.

Table 7.1 List of Periodic Inspections (Continued)

Check part		Check item	How to inspect	Evaluation criteria
Keypad		1) Check that the display is clear. 2) Check that there is no missing part in the displayed characters.	1), 2) Visual inspection	1), 2) The display can be read and there is no fault.
Structure such as frames and covers		Check for: 1) Abnormal noise or excessive vibration 2) Loose bolts (at clamp sections) 3) Deformation or breakage 4) Discoloration caused by overheat 5) Contamination or accumulation of dust or dirt	1) Visual or auditory inspection 2) Retighten. 3), 4), 5) Visual inspection	1), 2), 3), 4), 5) No abnormalities
Main circuit	Common	1) Check that bolts and screws are tight and not missing. 2) Check the devices and insulators for deformation, cracks, breakage and discoloration caused by overheat and deterioration. 3) Check for contamination and accumulation of dust or dirt.	1) Retighten. 2), 3) Visual inspection	1), 2), 3) No abnormalities
	Conductors and wires	1) Check conductors for discoloration and distortion caused by overheat. 2) Check the sheath of the wires for cracks and discoloration.	1), 2) Visual inspection	1), 2) No abnormalities
	Terminal blocks	Check that the terminal blocks are not damaged.	Visual inspection	No abnormalities
	DC link bus capacitor	1) Check for electrolyte leakage, discoloration, cracks and swelling of the case. 2) Check that the safety valve does not protrude remarkably. 3) Measure the capacitance if necessary.	1), 2) Visual inspection 3) Measure the discharge time with capacitance probe.	1), 2) No abnormalities 3) The discharge time should not be shorter than the one specified by the replacement manual.
	Braking resistor	1) Check for abnormal odor or cracks in insulators, caused by overheat. 2) Check for broken wires.	1) Olfactory and visual inspection 2) Check the wires visually. Or disconnect either wire and measure the conductivity with a multimeter.	1) No abnormalities 2) Within ± 10% of the resistance of the braking resistor
	Transformer and reactor	Check for abnormal roaring noise and odor.	Auditory, visual and olfactory inspection	No abnormalities

Table 7.1 List of Periodic Inspections (Continued)

Check part		Check item	How to inspect	Evaluation criteria
Main circuit	Magnetic contactor and relay	1) Check for chatters during operation. 2) Check for rough contacts.	1) Hearing inspection 2) Visual inspection	1), 2) No abnormalities
Control circuit	Printed circuit boards	1) Check for loose screws and connectors. 2) Check for abnormal odor and discoloration. 3) Check for cracks, breakage, deformation and remarkable rust. 4) Check the capacitors for electrolyte leaks and deformation.	1) Retighten. 2) Olfactory and visual inspection 3), 4) Visual inspection	1), 2), 3), 4) No abnormalities
Cooling system	Cooling fan	1) Check for abnormal noise and excessive vibration. 2) Check for loose bolts. 3) Check for discoloration caused by overheat.	1) Auditory and visual inspection, or turn manually (be sure to turn the power OFF). 2) Retighten. 3) Visual inspection	1) Smooth rotation 2), 3) No abnormalities
	Ventilation path	Check the heat sink, intake and exhaust ports for clogging and foreign materials.	Visual inspection	No abnormalities

Remove dust accumulating on the inverter with a vacuum cleaner. If the inverter is stained, wipe it off with a chemically neutral cloth.

7.3 List of Periodical Replacement Parts

The inverter consists of many electronic parts including semiconductor devices. Table 7.2 lists replacement parts that should be periodically replaced for preventive maintenance (Use the lifetime judgment function as a guide). These parts are likely to deteriorate with age due to their constitution and properties, leading to the decreased performance or failure of the inverter.

When the replacement is necessary, consult your Fuji Electric representative.

Table 7.2 Replacement Parts

Part name	Standard replacement intervals (See Note below.)
DC link bus capacitor	10 years
Electrolytic capacitors on the printed circuit boards	10 years
Cooling fan	10 years

(Note) These replacement intervals are based on the inverter's service life estimated under the following conditions.
- Ambient temperature: 40°C
- Load factor: 80% of the rated current given in parentheses ( ) in Chapter 8 "Specifications"
- Running 12 hours/day

In environments with an ambient temperature above 40°C or a large amount of dust or dirt, the replacement intervals may be shorter.

Standard replacement intervals mentioned above are only a guide for replacement, not a guaranteed service life.

7.3.1 Judgment on service life

(1) Viewing data necessary for judging service life; Measurement procedures

Through Menu #5 "Maintenance Information" in Programming mode, you can view on the keypad various data (as a guideline) necessary for judging whether key components such as the DC link bus capacitor, electrolytic capacitors on the printed circuit boards, and cooling fan are approaching their service life.

①-1 Measuring the capacitance of the DC link bus capacitor (in comparison with initial one at shipment)

Measure the capacitance of the DC link bus capacitor according to the procedure given below. The result will be displayed on the keypad as a ratio (%) to the initial capacitance at the time of factory shipment.

---------- **Procedure for measuring capacitance** ----------

1) To ensure validity in the comparative measurement, put the condition of the inverter back to the state at factory shipment.
   - Remove the option card (if already in use) from the inverter.
   - In case another inverter is connected via the DC link bus to the P(+) and N(-) terminals of the main circuit, disconnect the wires. (You do not need to disconnect a DC reactor (optional), if any.)
   - If the standard keypad has been replaced with an optional remote keypad after the purchase, put back the original standard keypad.
   - Turn OFF all the digital input signals fed to terminals [FWD], [REV], and [X1] through [X3] of the control circuit.
   - If a potentiometer is connected to terminal [13], disconnect it.
   - If an external apparatus is attached to terminal [PLC], disconnect it.
   - Ensure that transistor output signal ([Y1]) and relay output signals ([30A/B/C]) will not be turned ON.

     Note If negative logic is specified for the transistor output and relay output signals, they are considered ON when the inverter is not running. Specify positive logic for them.

   - Keep the ambient temperature within 25 ±10°C.
2) Switch ON the main circuit power.
3) Confirm that the cooling fan is rotating and the inverter is in stopped state.
4) Switch OFF the main circuit power.
5) Start the measurement of the capacitance of the DC link bus capacitor. Make sure that " . . . . " appears on the LED monitor.

   Note If " . . . . " does not appear on the LED monitor, the measurement will not start. Check the conditions listed in 1).

6) Once " . . . . " has disappeared from the LED monitor, switch ON the main circuit power again.
7) Select Menu #5 "Maintenance Information" in Programming mode and note the reading (relative capacitance (%) of the DC link bus capacitor).

---

① -2 Measuring the capacitance of the DC link bus capacitor (during power-off time under ordinary operating condition)

If the measuring method for discharging condition of the DC link bus capacitor during a power-off time under the ordinary operating condition at the end user's installation is different from the initial measuring method at the time of factory shipment, the capacitance of the DC link bus capacitors can not be measured. Follow the procedure mentioned below when you measure the capacitance of the DC link bus capacitors under the ordinary operating condition at the end user's installation.

---------- **Procedure for setting up measurement condition** ----------

1) Set function code H98 (Protection/maintenance function) to enable the user to specify the judgment criteria for the service life of the DC link bus capacitor (Bit 3) (refer to function code H98).
2) Place the inverter in stopped state.
3) Place the inverter in the state of power-off under ordinary operating conditions.
4) Set both function codes H42 (Capacitance of DC link bus capacitor) and H47 (Initial capacitance of DC link bus capacitor) to "0000."
5) Switch OFF the inverter.

   Measure the discharging time of the DC link bus capacitor and save the result in function code H47 (Initial capacitance of DC link bus capacitor).

   The condition under which the measurement has been conducted will be automatically collected and saved.

   During the measurement, " . . . . " appears on the LED monitor.
6) Switch ON the inverter again. Confirm that H42 (Capacitance of DC link bus capacitor) and H47 (Initial capacitance of DC link bus capacitor) hold right values. Move to Menu #5 "Maintenance Information" and confirm that the relative capacitance (ratio to full capacitance) is 100%.

   Note If the measurement has failed, "0001" is entered into both H42 and H47. Check whether there has been any mistake in operation and conduct the measurement again.

To change the settings back to the state at the time of factory shipment, set H47 (Initial capacitance of DC link bus capacitor) to "0002"; the original values will be restored.

Hereafter, each time the inverter is switched OFF, the discharging time of the DC link bus capacitor is automatically measured if the above condition is met.

Note The condition given above produces a rather large measurement error. If this mode gives you a lifetime alarm, set H98 (Maintenance operation) back to the default setting (Bit 3 (Specify service life criteria for replacing the DC link bus capacitor) = 0) and conduct the measurement under the condition at the time of factory shipment.

② Electrolytic capacitors on the printed circuit boards

Move to Menu #5 "Maintenance Information" in Programming mode and check the cumulative run time of the electrolytic capacitors on the printed circuit boards. This value is calculated from the cumulative total number of hours a voltage has been applied on the electrolytic capacitor. The value is displayed on the LED monitor in units of 1000 hours.

③ Cooling fan

Select Menu #5 "Maintenance Information" and check the cumulative run time of the cooling fan. The inverter accumulates hours for which the cooling fan has run. The display is in units of 1000 hours. The cumulative time should be used just a guide since the actual service life will be significantly affected by the temperature and operation environment.

(2) Early warning of lifetime alarm

For the components listed in Table 7.3, you can get an early warning of lifetime alarm at the transistor output terminal [Y1] and the relay contact terminals [30A/B/C] as soon as any of the conditions listed under the "Judgment level" column has been exceeded. When the replacement data of any parts exceeds the judgment level, this signal comes ON.

Table 7.3 Criteria for Issuing a Lifetime Alarm

Parts to be replaced	Judgment level
DC link bus capacitor	85% or lower of the initial capacitance at shipment
Electrolytic capacitors on the printed circuit boards	87000 hours or longer as cumulative run time (Estimated service life at the inverter's ambient temperature of 40°C under 80% of full load when running 12 hours/day)
Cooling fan	87000 hours or longer as cumulative run time (Estimated service life at the inverter's ambient temperature of 40°C under 80% of full load when running 12 hours/day)

7.4 Measurement of Electrical Amounts in Main Circuit

Because the voltage and current of the power supply (input, primary circuit) of the main circuit of the inverter and those of the motor (output, secondary circuit) contain harmonic components, the readings may vary with the type of the meter. Use meters indicated in Table 7.4 when measuring with meters for commercial frequencies.

The power factor cannot be measured by a commercially available power-factor meter that measures the phase difference between the voltage and current. To obtain the power factor, measure the power, voltage and current on each of the input and output sides and use the following formula.

■ Three-phase input

$$\text{Power factor} = \frac{\text{Electric power (W)}}{\sqrt{3}\times\text{Voltage (V)}\times\text{Current (A)}} \times 100\ \%$$

■ Single-phase input

$$\text{Power factor} = \frac{\text{Electric power (W)}}{\text{Voltage (V)}\times\text{Current (A)}} \times 100\ \%$$

Table 7.4 Meters for Measurement of Main Circuit

Item	Input (primary) side			Output (secondary) side			DC link bus voltage (P (+)-N (-))
Waveform	Voltage 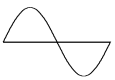	Current		Voltage 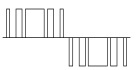	Current 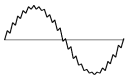		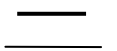
Name of meter	Ammeter AR, AS, AT	Voltmeter VR, VS, VT	Wattmeter WR, WT	Ammeter AU, AV, AW	Voltmeter VU, VV, VW	Wattmeter WU, WW	DC voltmeter V
Type of meter	Moving iron type	Rectifier or moving iron type	Digital AC power meter	Digital AC power meter	Digital AC power meter	Digital AC power meter	Moving coil type
Symbol of meter			—	—	—	—	

Note It is not recommended that meters other than a digital AC power meter be used for measuring the output voltage or output current since they may cause larger measurement errors or, in the worst case, they may be damaged.

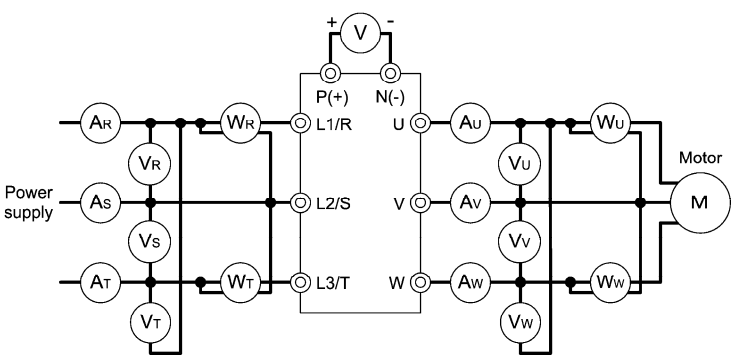

Figure 7.1 Connection of Meters

7.5 Insulation Test

Since the inverter has undergone an insulation test before shipment, avoid making a Megger test at the customer's site.

If a Megger test is unavoidable for the main circuit, observe the following instructions; otherwise, the inverter may be damaged.

A withstand voltage test may also damage the inverter if the test procedure is wrong. When the withstand voltage test is necessary, contact your Fuji Electric representative.

(1) Megger test of main circuit

1) Use a 500 VDC Megger and shut off the main power supply without fail during measurement.
2) If the test voltage leaks to the control circuit due to the wiring, disconnect all the wiring from the control circuit.
3) Connect the main circuit terminals with a common line as shown in Figure 7.2.
4) The Megger test must be limited to across the common line of the main circuit and the ground (⏚).
5) Value of 5 MΩ or more displayed on the Megger indicates a correct state. (The value is measured on an inverter alone.)

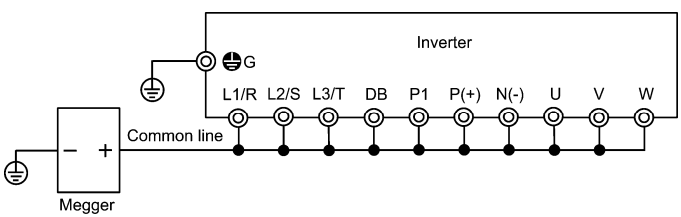

Figure 7.2 Main Circuit Terminal Connection for Megger Test

(2) Insulation test of control circuit

Do not make a Megger test or withstand voltage test for the control circuit. Use a high resistance range tester for the control circuit.

1) Disconnect all the external wiring from the control circuit terminals.
2) Perform a continuity test to the ground. One MΩ or a larger measurement indicates a correct state.

(3) Insulation test of external main circuit and sequence control circuit

Disconnect all the wiring connected to the inverter so that the test voltage is not applied to the inverter.

7.6 Inquiries about Product and Guarantee

7.6.1 When making an inquiry

Upon breakage of the product, uncertainties, failure or inquiries, inform your Fuji Electric representative of the following information.

1) Inverter type (Refer to Chapter 1, Section 1.1.)
2) SER No. (serial number of equipment) (Refer to Chapter 1, Section 1.1.)
3) Function codes and their data that you changed from the factory defaults (Refer to Chapter 3, Section 3.4.2.)
4) ROM version (Refer to Chapter 3, Section 3.4.5.)
5) Date of purchase
6) Inquiries (for example, point and extent of breakage, uncertainties, failure phenomena, and other circumstances)
7) Production year & week (Refer to Chapter 1, Section 1.1.)

7.6.2 Product warranty

To all our customers who purchase Fuji Electric products included in this documentation:

Please take the following items into consideration when placing your order.

When requesting an estimate and placing your orders for the products included in these materials, please be aware that any items such as specifications which are not specifically mentioned in the contract, catalog, specifications or other materials will be as mentioned below.

In addition, the products included in these materials are limited in the use they are put to and the place where they can be used, etc., and may require periodic inspection. Please confirm these points with your sales representative or directly with this company.

Furthermore, regarding purchased products and delivered products, we request that you take adequate consideration of the necessity of rapid receiving inspections and of product management and maintenance even before receiving your products.

[1] Free of charge warranty period and warranty range

(1) Free of charge warranty period

1) The product warranty period is ''1 year from the date of purchase'' or 24 months from the manufacturing date imprinted on the name place, whichever date is earlier.
2) However, in cases where the use environment, conditions of use, use frequency and times used, etc., have an effect on product life, this warranty period may not apply.
3) Furthermore, the warranty period for parts restored by Fuji Electric's Service Department is "6 months from the date that repairs are completed.''

(2) Warranty range

1) In the event that breakdown occurs during the product's warranty period which is the responsibility of Fuji Electric, Fuji Electric will replace or repair the part of the product that has broken down free of charge at the place where the product was purchased or where it was delivered. However, if the following cases are applicable, the terms of this warranty may not apply.

① The breakdown was caused by inappropriate conditions, environment, handling or use methods, etc. which are not specified in the catalog, operation manual, specifications or other relevant documents.

② The breakdown was caused by the product other than the purchased or delivered Fuji's product.

③ The breakdown was caused by the product other than Fuji's product, such as the customer's equipment or software design, etc.

④ Concerning the Fuji's programmable products, the breakdown was caused by a program other than a program supplied by this company, or the results from using such a program.

⑤ The breakdown was caused by modifications or repairs affected by a party other than Fuji Electric.

⑥ The breakdown was caused by improper maintenance or replacement using consumables, etc. specified in the operation manual or catalog, etc.

⑦ The breakdown was caused by a science or technical problem that was not foreseen when making practical application of the product at the time it was purchased or delivered.

⑧ The product was not used in the manner the product was originally intended to be used.

⑨ The breakdown was caused by a reason which is not this company's responsibility, such as lightning or other disaster.

(2) Furthermore, the warranty specified herein shall be limited to the purchased or delivered product alone.

(3) The upper limit for the warranty range shall be as specified in item (1) above and any damages (damage to or loss of machinery or equipment, or lost profits from the same, etc.) consequent to or resulting from breakdown of the purchased or delivered product shall be excluded from coverage by this warranty.

(3) Trouble diagnosis

As a rule, the customer is requested to carry out a preliminary trouble diagnosis. However, at the customer's request, this company or its service network can perform the trouble diagnosis on a chargeable basis. In this case, the customer is asked to assume the burden for charges levied in accordance with this company's fee schedule.

[2] Exclusion of liability for loss of opportunity, etc.

Regardless of whether a breakdown occurs during or after the free of charge warranty period, this company shall not be liable for any loss of opportunity, loss of profits, or damages arising from special circumstances, secondary damages, accident compensation to another company, or damages to products other than this company's products, whether foreseen or not by this company, which this company is not be responsible for causing.

[3] Repair period after production stop, spare parts supply period (holding period)

Concerning models (products) which have gone out of production, this company will perform repairs for a period of 7 years after production stop, counting from the month and year when the production stop occurs. In addition, we will continue to supply the spare parts required for repairs for a period of 7 years, counting from the month and year when the production stop occurs. However, if it is estimated that the life cycle of certain electronic and other parts is short and it will be difficult to procure or produce those parts, there may be cases where it is difficult to provide repairs or supply spare parts even within this 7-year period. For details, please confirm at our company's business office or our service office.

[4] Transfer rights

In the case of standard products which do not include settings or adjustments in an application program, the products shall be transported to and transferred to the customer and this company shall not be responsible for local adjustments or trial operation.

[5] Service contents

The cost of purchased and delivered products does not include the cost of dispatching engineers or service costs. Depending on the request, these can be discussed separately.

[6] Applicable scope of service

Above contents shall be assumed to apply to transactions and use of the country where you purchased the products.

Consult the local supplier or Fuji for the detail separately.

Chapter 8 SPECIFICATIONS

8.1 Standard Models

8.1.1 Three-phase 200 V class series (☐ = A, U)

Item			Specifications						
Type (FRN_ _ _ _ C2S-2☐)			0001	0002	0004	0006	0010	0012	0020
Applicable motor rating (kW) *1 (when ☐ = A)			0.1	0.2	0.4	0.75	1.5	2.2	3.7
Applicable motor rating (HP) *1 (when ☐ = U)			1/8	1/4	1/2	1	2	3	5
Output Ratings	Rated capacity (kVA) *2		0.30	0.57	1.3	2.0	3.5	4.5	7.2
	Rated voltage (V) *3		Three-phase, 200 to 240 V (with AVR function)						
	Rated current (A) *4		0.8 (0.7)	1.5 (1.4)	3.5 (2.5)	5.5 (4.2)	9.2 (7.0)	12.0 (10.0)	19.1 (16.5)
	Overload capability		150% of rated output current for 1 min. 150% of rated output current for 1 min or 200% of rated output current for 0.5 s (for the rated current given in parentheses)						
	Rated frequency (Hz)		50/60 Hz						
Input Ratings	Phases, voltage, frequency		Three-phase, 200 to 240 V, 50/60 Hz						
	Voltage and frequency variations		Voltage: +10 to -15% (Interphase voltage unbalance: 2% or less) *5, Frequency: +5 to -5%						
	Rated current (A) *6	(w/ DCR)	0.57	0.93	1.6	3.0	5.7	8.3	14.0
		(w/o DCR)	1.1	1.8	3.1	5.3	9.5	13.2	22.2
	Required power supply capacity (kVA) *7		0.2	0.3	0.6	1.1	2.0	2.9	4.9
Braking	Torque (%) *8		150		100		50	30	
	DC braking		Braking starting frequency*9: 0.0 to 60.0 Hz, Braking time: 0.0 to 30.0 s, Braking level: 0 to 100%						
	Braking transistor		--		Built-in				
Applicable safety standards			UL508C, IEC 61800-5-1: 2007 (under application)						
Enclosure			IP20 (IEC 60529:1989), UL open type (UL50)						
Cooling method			Natural cooling				Fan cooling		
Mass (kg)			0.6	0.6	0.7	0.8	1.7	1.7	2.5

*1 Fuji 4-pole standard motors

*2 Refers to the rated capacity assuming the rated output voltage as 220 V.

*3 Output voltages cannot exceed the power supply voltage.

*4 The load shall be reduced so that the continuous operating current is the rated current in parentheses or less if the carrier frequency is set to 3 kHz or above or the ambient temperature exceeds 40°C.

*5 $\text{Interphase voltage unbalance}(\%) = \frac{\text{Max. voltage}(\text{V}) - \text{Min. voltage}(\text{V})}{3\text{-phase average voltage}(\text{V})} \times 67 \quad (\text{Refer to IEC } 61800\text{-}3:2004)$

If this value is 2 to 3%, use an optional AC reactor (ACR).

*6 Refers to the estimated value to apply when the power supply capacity is 500 kVA (inverter capacity x 10 when the inverter capacity exceeds 50 kVA) and the inverter is connected to the %X = 5% power supply.

*7 Refers to the value to apply when a DC reactor (DCR) is used.

*8 Refers to the average braking torque to apply when the motor running alone decelerates from 60 Hz with the AVR control being OFF. (It varies with the efficiency of the motor.)

*9 Available only for induction motor drive.

Note: A box (☐) in the above table replaces A or U depending on the shipping destination.

8.1.2 Three-phase 400 V class series (☐ = A, C, E, U)

Item			Specifications				
Type (FRN_ _ _ _ C2S-4☐)			0002	0004	0005	0007	0011
Applicable motor rating (kW) *1 (when ☐ = A, C or E)			0.4	0.75	1.5	2.2	3.7 (4.0)*
Applicable motor rating (HP) *1 (when ☐ = U)			1/2	1	2	3	5
Output Ratings	Rated capacity (kVA) *2		1.3	2.3	3.2	4.8	8.0
	Rated voltage (V) *3		Three-phase, 380 to 480 V (with AVR function)				
	Rated current (A)		1.8 (1.5)	3.1 (2.5)	4.3 (3.7)	6.3 (5.5)	10.5 (9.0)
	Overload capability		150% of rated output current for 1 min. 150% of rated output current for 1 min or 200% of rated output current for 0.5 s (for the rated current given in parentheses)				
	Rated frequency (Hz)		50/60 Hz				
Input Ratings	Phases, voltage, frequency		Three-phase, 380 to 480 V, 50/60 Hz				
	Voltage and frequency variations		Voltage: +10 to -15% (Interphase voltage unbalance: 2% or less) *5, Frequency: +5 to -5%				
	Rated current (A) *6	(w/ DCR)	0.85	1.6	3.0	4.4	7.3
		(w/o DCR)	1.7	3.1	5.9	8.2	13.0
	Required power supply capacity (kVA) *7		0.6	1.1	2.0	2.9	4.9
Braking	Torque (%) *8		100		50	30	
	DC braking		Braking starting frequency*9: 0.0 to 60.0 Hz, Braking time: 0.0 to 30.0 s, Braking level: 0 to 100%				
	Braking transistor		Built-in				
Applicable safety standards			UL508C, IEC 61800-5-1: 2007 (under application)				
Enclosure			IP20 (IEC 60529:1989), UL open type (UL50)				
Cooling method			Natural cooling		Fan cooling		
Mass (kg)			1.2	1.3	1.7	1.7	2.5

* 4.0 kW for the EU. The inverter type is FRN0011C2S-4E.

*1 Fuji 4-pole standard motors

*2 Refers to the rated capacity assuming the rated output voltage as 440 V.

*3 Output voltages cannot exceed the power supply voltage.

*5 $\text{Interphase voltage unbalance}(\%) = \frac{\text{Max. voltage}(\text{V}) - \text{Min. voltage}(\text{V})}{3\text{-phase average voltage}(\text{V})} \times 67 \,(\text{Refer to IEC}\,61800\text{-}3:2004)$

If this value is 2 to 3%, use an optional AC reactor (ACR).

*6 Refers to the estimated value to apply when the power supply capacity is 500 kVA (inverter capacity x 10 when the inverter capacity exceeds 50 kVA) and the inverter is connected to the %X = 5% power supply.

*7 Refers to the value to apply when a DC reactor (DCR) is used.

*8 Refers to the average braking torque to apply when the motor running alone decelerates from 60 Hz with the AVR control being OFF. (It varies with the efficiency of the motor.)

*9 Available only for induction motor drive.

Note: A box (☐) in the above table replaces A, C, E, or U depending on the shipping destination.

8.1.3 Single-phase 200 V class series (☐ = A, C, E, U)

Item			Specifications					
Type (FRN_ _ _ _ C2S-7☐)			0001	0002	0004	0006	0010	0012
Applicable motor rating (kW) *1 (when ☐ = A, C or E)			0.1	0.2	0.4	0.75	1.5	2.2
Applicable motor rating (HP) *1 (when ☐ = U)			1/8	1/4	1/2	1	2	3
Output Ratings	Rated capacity (kVA) *2		0.30	0.57	1.3	2.0	3.5	4.5
	Rated voltage (V) *3		Three-phase, 200 to 240 V (with AVR function)					
	Rated current (A) *4		0.8 (0.7)	1.5 (1.4)	3.5 (2.5)	5.5 (4.2)	9.2 (7.0)	12.0 (10.0)
	Overload capability		150% of rated output current for 1 min or 200% of rated output current for 0.5 s					
	Rated frequency (Hz)		50/60 Hz					
Input Ratings	Phases, voltage, frequency		Single-phase, 200 to 240 V, 50/60 Hz					
	Voltage and frequency variations		Voltage: +10 to -15%, Frequency: +5 to -5%					
	Rated current (A) *6	(w/ DCR)	1.1	2.0	3.5	6.4	11.6	17.5
		(w/o DCR)	1.8	3.3	5.4	9.7	16.4	24.0
	Required power supply capacity (kVA) *7		0.3	0.4	0.7	1.3	2.4	3.5
Braking	Torque (%) *8		150		100		50	30
	DC braking		Braking starting frequency*9: 0.0 to 60.0 Hz, Braking time: 0.0 to 30.0 s, Braking level: 0 to 100%					
	Braking transistor		--		Built-in			
Applicable safety standards			UL508C, IEC 61800-5-1: 2007 (under application)					
Enclosure			IP20 (IEC 60529:1989), UL open type (UL50)					
Cooling method			Natural cooling				Fan cooling	
Mass (kg)			0.6	0.6	0.7	0.9	1.8	2.5

*1 Fuji 4-pole standard motors

*2 Refers to the rated capacity assuming the rated output voltage as 220 V.

*3 Output voltages cannot exceed the power supply voltage.

*4 The load shall be reduced so that the continuous operating current is the rated current in parentheses or less if the carrier frequency is set to 3 kHz or above or the ambient temperature exceeds 40°C.

*6 Refers to the estimated value to apply when the power supply capacity is 500 kVA (inverter capacity x 10 when the inverter capacity exceeds 50 kVA) and the inverter is connected to the %X = 5% power supply.

*7 Refers to the value to apply when a DC reactor (DCR) is used.

*8 Refers to the average braking torque to apply when the motor running alone decelerates from 60 Hz with the AVR control being OFF. (It varies with the efficiency of the motor.)

*9 Available only for induction motor drive.

Note: A box (☐) in the above table replaces A, C, E, or U depending on the shipping destination.

8.2 Common Specifications

Item			Explanation	
Output frequency	Setting range	Maximum frequency	25.0 to 400.0 Hz variable	
		Base frequency	25.0 to 400.0 Hz variable	
		Starting frequency	0.1 to 60.0 Hz variable	
		Carrier frequency	0.75 to 16 kHz variable **Note:** To protect the inverter, when the carrier frequency is 6 kHz or more, the carrier frequency automatically lowers depending upon the ambient temperature or output current states. (The automatic lowering function can be disabled.) ***1**	
	Output frequency accuracy (Stability)		• Analog setting: ±2% of max freq. (at 25°C), temperature drift: ±0.2% of max freq. (at 25±10°C) • Keypad setting: ±0.01% of max freq. (at 25°C), temperature drift: ±0.01% of max freq. (at 25±10°C)	
	Frequency setting resolution		• Analog setting: 1/1000 of maximum frequency • Keypad setting: 0.01 Hz (99.99 Hz or less), 0.1 Hz (100.0 to 400.0 Hz) • Link setting: 1/20000 of maximum frequency or 0.01 Hz (fixed)	
Control	Control system		Driving induction motor (IM) • V/f control, slip compensation, auto torque boost • Dynamic torque vector control, automatic energy saving control Driving permanent magnet synchronous motor (PMSM) (without speed / position sensor) ***2** • Speed control range: 10% or more of the base frequency	
	Voltage/frequency characteristics		200 V series	• Possible to set output voltage at base frequency and at maximum output frequency (80 to 240 V). • The AVR control ***1** can be turned ON or OFF. • Non-linear V/f ***1** setting (2 points): Free voltage (0 to 240 V) and frequency (0 to 400 Hz) can be set.
			400 V series	• Possible to set output voltage at base frequency and at maximum output frequency (160 to 500 V). • The AVR control ***1** can be turned ON or OFF. • Non-linear V/f ***1** setting (2 points): Free voltage (0 to 500 V) and frequency (0 to 400 Hz) can be set.
	Torque boost ***1**		• Auto torque boost (For constant torque load) • Manual torque boost: Torque boost value can be set between 0.0 and 20.0%. • Select application load with the function code. (For variable torque load or constant torque load)	
	Starting torque ***1**		• 150% or more (Running at 1 Hz, with slip compensation and auto torque boost active)	
	Start/stop operation		Keypad: Start and stop with RUN and STOP keys (standard keypad/ optional remote keypad)	
			External signals (digital inputs): Run forward and stop command, Run reverse and stop command, coast-to-stop command, etc.	
			Link operation: Operation through RS-485 (built-in as standard)	

*****1 Available only for induction motor drive.
*2 Available in the ROM version 0500 or later.

	Item	Explanation
Control	Frequency setting	Keypad operation using the ⌃ and ⌄ keys (with data protection function) Also can be set with function code (only via communication) and be copied. ***2**
		Built-in potentiometer
		Analog input: 0 to ±10 V DC / 0 to 100% (terminal [12]), 4 to 20 mA / 0 to 100%, 0 to 20 mA / 0 to 100% (terminal [C1])
		Multistep frequency: Selectable from 16 different frequencies (step 0 to 15)
		UP/DOWN operation: Frequency can be increased or decreased while the digital input signal is ON.
		Link operation: Frequency can be specified through RS-485 communications link.
		Frequency setting switching: Two types of frequency settings can be switched with an external signal (digital input). Switchable to frequency settings given through the communications link or multistep frequency setting.
		Auxiliary frequency setting: Each of inputs from the built-in potentiometer and terminal [12]/[C1] can be added to the main setting as auxiliary frequency settings.
		Inverse operation: Switchable from "0 to +10 VDC/0 to 100%" to "+10 to 0 VDC/0 to 100%" by external signals. Switchable from "4 to 20 mA DC (0 to 20 mA DC)/0 to 100%" to "20 to 4 mA DC (20 to 0 mA DC)/0 to 100%" by external signals.
	Acceleration/ deceleration time	• Setting range: 0.00 to 3600 s, variable • The two types of acceleration/deceleration time settings can be made or selected individually (switchable during running). • Acceleration/deceleration pattern: Acceleration and deceleration pattern can be selected from 4 types: Linear, S-curve (weak), S-curve (strong), and Curvilinear (maximum acceleration/deceleration capacity of constant output). • Shutoff of a run command causes the motor to coast to a stop. • The acceleration/deceleration time for jogging can be set. (Setting range: 0.00 to 3600 s)
	Various functions	Frequency limiter (peak and bottom limiters), Bias frequency, Gain for frequency command, Jump frequency control, Jogging operation ***1**, Timer operation, Restart after momentary power failure ***1**, Slip compensation ***1**, Deceleration characteristics (Forced brake control), Current limit (Hardware current limiter) ***1**, PID control, Automatic deceleration, Overload prevention control, Auto energy saving operation ***1**, Cooling fan ON/OFF control, Offline tuning ***1**, Rotation direction limitation, and 2nd motor settings

*1 Available only for induction motor drive.
*2 Available in the ROM version 0500 or later.

Item		Explanation	
Display	During running/stop	Speed monitor, output current (A), output voltage (V), input power (kW), PID command value, PID feedback value, PID output, timer (s) and input watt-hour (kWh). ◆ Select the speed monitor to be displayed from the following: Output frequency (before slip compensation) (Hz), output frequency (after slip compensation) (Hz), reference frequency (Hz), load shaft speed (min^{-1}), line speed (m/min), constant feeding rate time (min). *Speed monitor can display the speed specified with E48.	
	When tripped	Displays the cause of trip by codes as follows. • OC1 (Overcurrent during acceleration) • OC2 (Overcurrent during deceleration) • OC3 (Overcurrent at constant speed) • Lin (Input phase loss) • LU (Undervoltage) • OPL (Output phase loss) • OU1 (Overvoltage during acceleration) • OU2 (Overvoltage during deceleration) • OU3 (Overvoltage during constant speed) • OH1 (Overheating of the heat sink) • OH2 (External thermal relay tripped) • OH4 (Motor protection (PTC thermistor)) • dbH (Braking resistor overheat) • CoF (PID feedback wire break)	• OL1 (Motor overload) • OL2 (Motor 2 overload) • OLU (Inverter unit overload) • Er1 (Memory error) • Er2 (Keypad communications error) • Er3 (CPU error) • Er5 (Operation procedure error) • Er7 (Tuning error) • Er8 (RS-485 error) • ErF (Data save error due to undervoltage) • Err (Mock alarm) • Erd (Step-out detection (for drive of permanent magnet synchronous motors)) ***2**
	During running or when tripped	Trip history: The causes (codes) of the last four trips are saved and displayed. The detailed running status data of the last four trips are also saved and displayed.	
Protection	Refer to Section 8.5 "Protective Functions."		
Environment	Refer to the Chapter 2, Section 2.1 "Operating Environment" and Chapter 1, Section 1.4, "Storage Environment."		

*2 Available in the ROM version 0500 or later.

8.3 Terminal Specifications

8.3.1 Terminal functions

For details about the main and control circuit terminals, refer to Chapter 2, Section 2.3.5 and Section 2.3.6 (Table 2.8), respectively.

8.3.2 Connection diagram in operation by external signal inputs

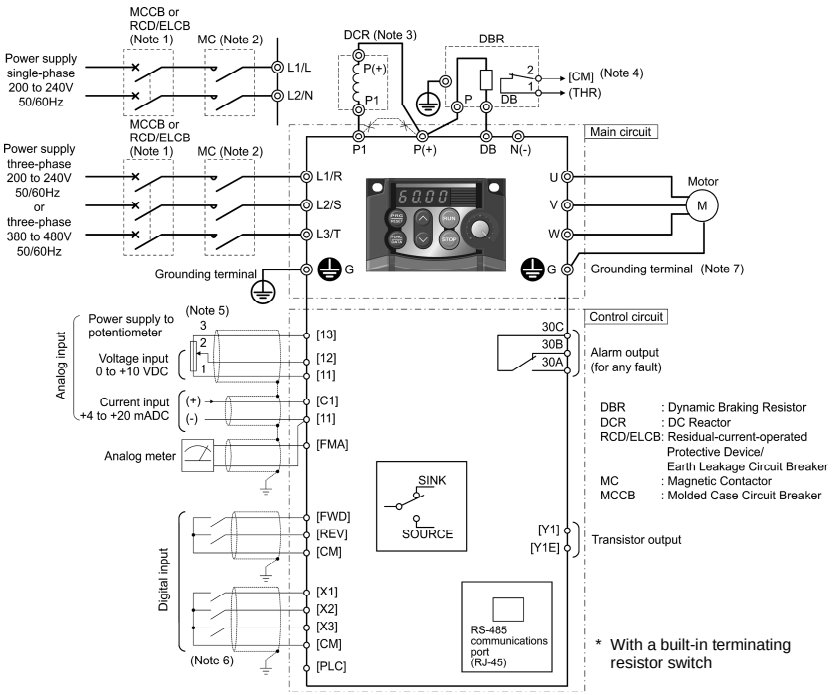

(Note 1) Install a recommended molded case circuit breaker (MCCB) or a residual-current-operated protective device (RCD)/earth leakage circuit breaker (ELCB) (with overcurrent protection) in the primary circuit of the inverter to protect wiring. Do not use an MCCB or RCD/ELCB whose capacity exceeds the recommended rated current.

(Note 2) A magnetic contactor (MC) should, if necessary, be mounted independent of the MCCB or ELCB to cut off the power fed to the inverter. Refer to page 9-2 for details. MCs or solenoids that will be installed close to the inverter require surge absorbers to be connected in parallel to their coils.

(Note 3) When connecting a DC reactor (option), remove the jumper bar from terminals [P1] and [P+].

(Note 4) The ***THR*** function can be used by assigning "9" (External alarm) to any of terminals [X1] to [X3], [FWD] or [REV] (function code E01 to E03, E98, or E99). For details, refer to Chapter 9.

(Note 5) Frequency can be set by connecting a frequency setting device (external potentiometer) between terminals [11], [12], and [13] instead of inputting voltage signal (0 to +10 VDC or 0 to +5 VDC) between terminals [12] and [11].

(Note 6) For the wiring of the control circuit, use shielded or twisted wires. When using shielded wires, connect the shields to earth. To prevent malfunction due to noise, keep the control circuit wiring away from the main circuit wiring as far as possible (recommended: 10 cm or longer), and never set them in the same wire duct. When crossing the control circuit wiring with the main circuit wiring, set them at right angles.

(Note 7) It is recommended for noise control that 3-phase, 4-wire cable be used for the motor wiring. Connect grounding wires of the motor to the grounding terminal ⏚G on the inverter.

The basic connection diagram above is for running/stopping the inverter and setting the frequency with external signals. Given below are connection notes.

(1) Set function code F02 to "1" (External signals).

(2) Set function code F01 to "1" (Voltage input to terminal [12]) or "2" (Current input to terminal [C1]).

(3) Short-circuit terminals [FWD] and [CM] to run the motor in the forward direction and opening them to stop it. Short-circuit terminals [REV] and [CM] to run the motor in the reverse direction and opening them to stop it.

(4) Frequency by voltage input is within the range from 0 to +10 VDC or 0 to the maximum frequency. Frequency by current input is within the range from +4 to +20 mADC or 0 to the maximum frequency.

8.4 External Dimensions

8.4.1 Standard models

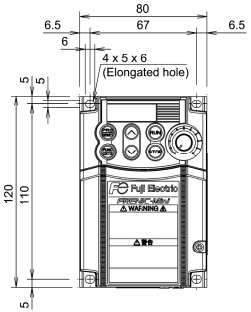

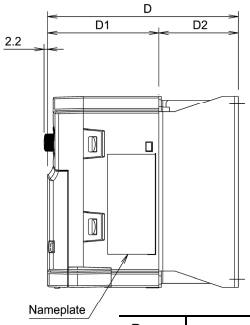

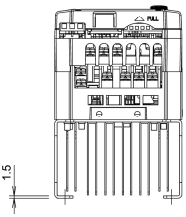

Power supply voltage	Inverter type	Dimensions (mm)		
		D	D1	D2
Three-phase 200 V	FRN0001C2S-2☐	80	70	10
	FRN0002C2S-2☐			
	FRN0004C2S-2☐	95		25
	FRN0006C2S-2☐	120		50
Single-phase 200 V	FRN0001C2S-7☐	80	70	10
	FRN0002C2S-7☐			
	FRN0004C2S-7☐	95		25
	FRN0006C2S-7☐	140	90	50

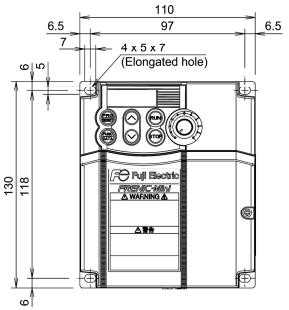

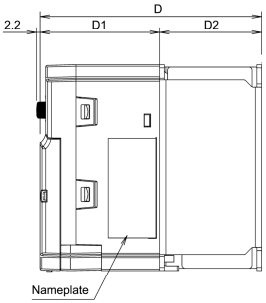

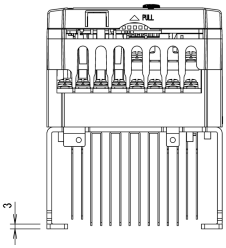

Power supply voltage	Inverter type	Dimensions (mm)		
		D	D1	D2
Three-phase 400 V	FRN0002C2S-4☐	115	75	40
	FRN0004C2S-4☐	139		64

Note: A box (☐) in the above tables replaces A, C, E, or U depending on the shipping destination.
For three-phase 200 V series of inverters, it replaces A or U.

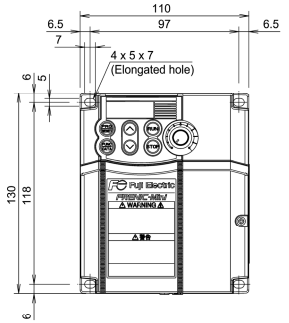

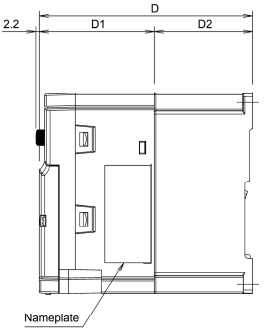

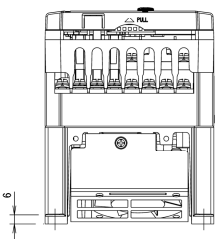

Power supply voltage	Inverter type	Dimensions (mm)		
		D	D1	D2
Three-phase 200 V	FRN0010C2S-2☐	139	75	64
	FRN0012C2S-2☐			
Three-phase 400 V	FRN0005C2S-4☐			
	FRN0007C2S-4☐			
Single-phase 200 V	FRN0010C2S-7☐	149	85	

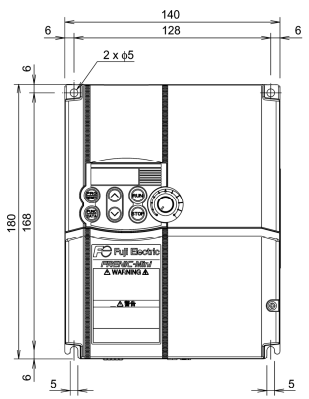

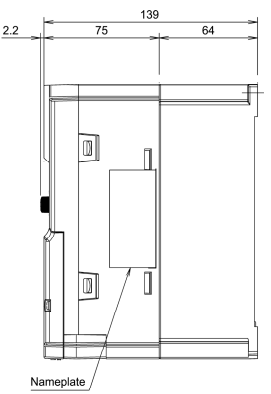

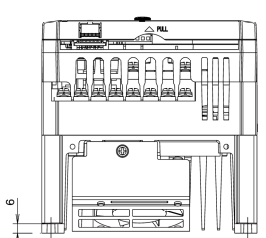

Power supply voltage	Inverter type
Three-phase 200 V	FRN0020C2S-2☐
Three-phase 400 V	FRN0011C2S-4☐
Single-phase 200 V	FRN0012C2S-7☐

Note: A box (☐) in the above tables replaces A, C, E, or U depending on the shipping destination.
For three-phase 200 V series of inverters, it replaces A or U.

8.5 Protective Functions

"—": Not applicable.

Name		Description		LED monitor displays	Alarm output [30A,B,C]
Overcurrent protection Short-circuit protection Ground fault protection		- Stops the inverter output to protect the inverter from an overcurrent resulting from overload. - Stops the inverter output to protect the inverter from an overcurrent due to a short circuit in the output circuit. - Stops the inverter output to protect the inverter from an overcurrent due to a ground fault in the output circuit. This protection is effective only when the inverter starts. If you turn on the inverter without removing the ground fault, this protection may not work.	During acceleration	0C1	Yes
			During deceleration	0C2	
			During running at constant speed	0C3	
Overvoltage protection		Stops the inverter output upon detection of overvoltage (400 VDC for 200 V series and 800 VDC for 400 V series) in the DC link bus. This protection is not assured if excess AC line voltage is applied inadvertently.	During acceleration	0U1	Yes
			During deceleration	0U2	
			During running at constant speed (Stopped)	0U3	
Undervoltage protection		Stops the inverter output when the DC link bus voltage drops below the undervoltage level (200 VDC for 200 V series and 400 VDC for 400 V series). However, when F14 = 4 or 5, no alarm is output even if the DC link bus voltage drops.		LU	Yes (Note)
Input phase loss protection		Detects input phase loss, stopping the inverter output. This function prevents the inverter from undergoing heavy stress that may be caused by input phase loss or inter-phase voltage unbalance and may damage the inverter. If connected load is light or a DC reactor is connected to the inverter, this function may not detect input phase loss if any. In single-phase series of inverters, this function is disabled by factory default.		Lin	Yes
Output phase loss protection		Detects breaks in inverter output wiring at the start of running and during running, stopping the inverter output.		OPL	Yes
Overheat protection	Inverter	- Stops the inverter output upon detecting excess heat sink temperature in case of cooling fan failure or overload.		0H1	Yes
	Braking resistor	- Protects the braking resistor from overheat in accordance with the setting of the electronic thermal overload relay for braking resistor. * It is necessary to set the function code data according to the braking resistor used (built-in or external).		dbH	Yes
Overload protection		Stops the inverter output according to the inverter heat sink temperature and the switching element temperature calculated from the output current.		OLU	Yes

(Note) No alarm output depending upon the data setting of the function code.

Name		Description	LED monitor displays	Alarm output [30A,B,C]
Motor protection	Electronic thermal overload relay	Stops the inverter output in accordance with the setting of the electronic thermal overload relay to protect the motor. This function protects general-purpose motors and inverter motors over the entire frequency range, as well as protecting the 2nd motor. * The operation level and thermal time constant (0.5 to 75.0 minutes) can be set.	OL 1 OL2	Yes
	PTC thermistor	A PTC thermistor input stops the inverter output for motor protection. A PTC thermistor is connected between terminals [C1] and [11], and a resistor is connected between terminals [13] and [C1].	OH4	Yes
	Overload early warning	Outputs a preliminary alarm at a preset level before the motor is stopped by the electronic thermal function for the purpose of protecting the motor.	—	—
Stall prevention		Operates if the inverter's output current exceeds the instantaneous overcurrent limit level, avoiding tripping of the inverter (during constant speed operation or during acceleration).	—	—
External alarm input		Stops the inverter output with an alarm through the digital input signal ***THR***.	OH2	Yes
Alarm relay output (for any fault)		The inverter outputs a relay contact signal when the inverter issues an alarm and stops the inverter output. < Alarm Reset > The alarm stop state is reset by pressing the PRG/RESET key or by the digital input signal ***RST***. < Saving the alarm history and detailed data > The information on the previous 4 alarms can be saved and displayed.	—	Yes
Memory error		The inverter checks memory data after power-on and when the data is written. If a memory error is detected, the inverter stops.	Er 1	Yes
Remote keypad (option) communications error		The inverter stops by detecting a communication error between the inverter and the remote keypad (option) during operation from the remote keypad.	Er2	Yes
CPU error		If the inverter detects a CPU error caused by noise or some other factor, the inverter stops.	Er3	Yes
Operation error	STOP key priority	Pressing the STOP key on the keypad forces the inverter to decelerate and stop the motor even if the inverter is running by any run commands given via the terminals or communications (link operation). After the motor stops, the inverter issues alarm Er5.	Er5	Yes
	Start check function	Inverters prohibit any run operations and displays Er5 on the LED monitor if a run command is present at the time of any of the following status changes. - Powering up - An alarm (PRG/RESET key turned ON) is released or an alarm reset (***RST***) is input. - Link command (***LE***) has switched inverter operation and the run command in the source to be switched is active.		

Name	Description	LED monitor displays	Alarm output [30A,B,C]
Tuning error ***1**	Stops the inverter output when a tuning failure, interruption, or abnormal tuning result is detected during tuning of motor parameters.	Er-7	Yes
RS-485 communication error	Upon detection of an RS-485 communications error, the inverter stops its output.	Er-8	Yes
Data save error during undervoltage	If the data could not be saved during activation of the undervoltage protection function, the inverter displays the alarm code.	Er-F	Yes
Retry function	When the inverter stops due to a trip, this function automatically resets the inverter and restarts it. (The number of retries and the latency between stop and reset can be specified.)	—	—
Surge protection	Protects the inverter against surge voltages which might appear between one of the power lines for the main circuit and the ground.	—	—
Protection against momentary power failure	Upon detection of a momentary power failure lasting 15 ms or more, this function stops the inverter output. If "restart after momentary power failure" is selected, this function invokes a restart process when power has been restored within a predetermined period.	—	—
Overload prevention control	In the event of overheating of the cooling fan or an overload condition (alarm display: OH1 or OLU), the output frequency of the inverter is reduced to keep the inverter from tripping.	—	—
Mock alarm	A mock alarm can be generated with keypad operations to check the failure sequence.	Err	Yes
PID feedback wire break detection	Upon detection of a PID feedback wire break, this function outputs an alarm.	CoF	Yes
Step-out detection ***2**	Upon detection of a step-out of PMSM, the inverter stops its output.	Er-d	Yes

*1 Available only for induction motor drive.
*2 Available in the ROM version 0500 or later.

Chapter 9 LIST OF PERIPHERAL EQUIPMENT AND OPTIONS

The table below lists the main peripheral equipment and options that are connected to the FRENIC-Mini. Use them in accordance with your system requirements.

For details, refer to the FRENIC-Mini User's Manual (24A7-E-0023), Chapter 6 "SELECTING PERIPHERAL EQUIPMENT."

<table>
<tr><th></th><th>Name of peripheral equipment</th><th>Function and application</th></tr>
<tr><td>Main peripheral equipment</td><td>Molded case circuit breaker (MCCB)
Residual-current-operated protective device (RCD) /Earth leakage circuit breaker (ELCB)*
* with overcurrent protection</td><td>MCCBs are designed to protect the power circuits between the power control board and inverter's main terminals (L1/R, L2/S and L3/T for three-phase power, L1/L and L2/N for single-phase power) from overload or short-circuit which in turn prevents secondary disasters caused by the inverter malfunctioning.
RCDs/ELCBs function in the same way as MCCBs. Use the MCCBs and RCDs/ELCBs that satisfy the recommended rated current listed below.
<table>
<tr><th rowspan="2">Power supply voltage</th><th rowspan="2">Applicable motor rating (kW)</th><th rowspan="2">Inverter type</th><th colspan="2">Recommended rated current (A) of MCCB and RCD/ELCB</th></tr>
<tr><th>w/ DC reactor</th><th>w/o DC reactor</th></tr>
<tr><td rowspan="8">Three-phase 200 V</td><td>0.1</td><td>FRN0001C2S-2□</td><td rowspan="4">5</td><td rowspan="3">5</td></tr>
<tr><td>0.2</td><td>FRN0002C2S-2□</td></tr>
<tr><td>0.4</td><td>FRN0004C2S-2□</td></tr>
<tr><td>0.75</td><td>FRN0006C2S-2□</td><td>10</td></tr>
<tr><td>1.5</td><td>FRN0010C2S-2□</td><td rowspan="2">10</td><td>15</td></tr>
<tr><td>2.2</td><td>FRN0012C2S-2□</td><td>20</td></tr>
<tr><td>3.7</td><td>FRN0020C2S-2□</td><td>20</td><td>30</td></tr>
<tr><td rowspan="5">Three-phase 400 V</td><td>0.4</td><td>FRN0002C2S-4□</td><td rowspan="4">5</td><td rowspan="2">5</td></tr>
<tr><td>0.75</td><td>FRN0004C2S-4□</td></tr>
<tr><td>1.5</td><td>FRN0005C2S-4□</td><td>10</td></tr>
<tr><td>2.2</td><td>FRN0007C2S-4□</td><td>15</td></tr>
<tr><td>3.7 (4.0)*</td><td>FRN0011C2S-4□</td><td>10</td><td>20</td></tr>
<tr><td rowspan="7">Single-phase 200 V</td><td>0.1</td><td>FRN0001C2S-7□</td><td rowspan="4">5</td><td rowspan="2">5</td></tr>
<tr><td>0.2</td><td>FRN0002C2S-7□</td></tr>
<tr><td>0.4</td><td>FRN0004C2S-7□</td><td>10</td></tr>
<tr><td>0.75</td><td>FRN0006C2S-7□</td><td>10</td><td>15</td></tr>
<tr><td>1.5</td><td>FRN0010C2S-7□</td><td>15</td><td>20</td></tr>
<tr><td>2.2</td><td>FRN0012C2S-7□</td><td>20</td><td>30</td></tr>
</table>
Note: A box (□) in the above table replaces A, C, E, or U depending on the shipping destination. For three-phase 200 V class series of inverters, it replaces A or U.
* 4.0 kW for the EU. The inverter type is FRN0011C2S-4E.</td></tr>
</table>

	Name of peripheral equipment	Function and application
Main peripheral equipment	Molded case circuit breaker Earth leakage circuit breaker* * with overcurrent protection	**⚠WARNING** When connecting the inverter to the power supply, add a recommended molded case circuit breaker and earth leakage circuit breaker* in the path of power supply. Do not use the devices with the rated current out of the recommenced range. *With overcurrent protection **Fire could occur.** Select the MCCB or RCD/ELCB with appropriate rated current and breaking capacity according to the power supply capacity.
	Magnetic contactor (MC)	An MC can be used at both the power input (primary) and output (secondary) sides of the inverter. At each side, the MC works as described below. When inserted in the output circuit of the inverter, an MC can also switch the motor drive power source between the inverter output and commercial power lines. ■ At the power source (primary) side Insert an MC in the power source side of the inverter in order to: 1) Forcibly cut off the inverter from the power source (generally, commercial/factory power lines) with the protection function built into the inverter, or with the terminal signal line. 2) Stop the inverter operation in an emergency when the inverter cannot interpret the stop command due to internal/external circuit failures. 3) Cut off the inverter from the power source when the MCCB inserted in the power source side cannot cut it off for maintenance or inspection purpose. If you are to use the MC for this purpose only, it is recommended that you use an MC capable of turning the MC on/off manually. Note When your system requires the motor(s) driven by the inverter to be started/stopped with the MC, the frequency of the starting/stopping operation should be once or less per hour. The more frequent the operation, the shorter operation life of the MC and capacitor/s used in the DC link bus due to thermal fatigue caused by the frequent charging of the current flow. If this is not necessary, start/stop the motor with the terminal commands ***FWD***, ***REV*** and/or ***HLD***, or with the keypad. ■ At the output (secondary) side Prevent externally turned-around current from being applied to the inverter power output terminals (U, V, and W) unexpectedly. An MC should be used, for example, if a circuit that switches the motor driving source between the inverter output and commercial/factory power lines is connected to the inverter. Note As application of high voltage external current to the inverter's secondary (output) circuits may break the IGBTs, MCs should be used in the power control system circuits to switch the motor drive power source to the commercial/factory power lines after the motor has come to a complete stop. Also ensure that voltage is never mistakenly applied to the inverter output terminals due to unexpected timer operation, or similar. ■ Driving the motor using commercial power lines MCs can also be used to switch the power source of the motor driven by the inverter to a commercial power source.

	Name of option	Function and application
Main option	Braking resistors (Standard model) (DBRs)	A braking resistor converts regenerative energy generated from deceleration of the motor and converts it to heat for consumption. Use of a braking resistor results in improved deceleration performance of the inverter.
	DC reactors (DCRs)	A DCR is mainly used for power supply normalization and for supplied power-factor reformation (for reducing harmonic components). 1) For power supply normalization - Use an optional DC reactor (DCR) when the capacity of the power supply transformer exceeds 500 kVA and is 10 times or more the inverter's rated capacity. Otherwise, the percentage-reactance of the power source decreases, and harmonic components and their peak levels increase. These factors may break rectifiers or capacitors in the converter section of inverter, or decrease the capacitance of the capacitor (which can shorten the inverter's service life). - Also use a DCR when there are thyristor-driven loads or when phase-advancing capacitors are being turned on/off. 2) For supplied power-factor reformation (harmonic component reduction) Generally a capacitor is used to reform the power factor of the load, however, it cannot be used in a system that includes an inverter. Using a DCR increases the reactance of inverter's power source so as to decrease harmonic components on the power source lines and reform the power factor of inverter. Using a DCR reforms the input power factor to approximately 90 to 95%. Note At the time of shipping, a jumper bar is connected across the terminals P1 and P (+) on the terminal block. Remove the jumper bar when connecting a DCR.
	Output circuit filters (OFLs)	Include an OFL in the inverter power output circuit to: 1) Suppress the voltage fluctuation at the motor input terminals This protects the motor from insulation damage caused by the application of high voltage surge currents by the 400 V class of inverters. 2) Suppress leakage current from the power output (secondary) lines (due to harmonic components) This reduces the leakage current when the motor is hooked by long power feed lines. It is recommended that the length of the power feed line be kept to less than 400 m. 3) Minimize emission and/or induction noise issued from the power output (secondary) lines OFLs are effective in reducing noise from long power feed lines, such as those used in plants, etc. Note Use an OFL within the allowable carrier frequency range specified by function code F26 (Motor sound (carrier frequency)). Otherwise, the filter will overheat.

	Name of option	Function and application
Main option	Ferrite ring reactors for reducing radio frequency noise (ACL)	An ACL is used to reduce radio noise emitted by the inverter. An ACL suppresses the outflow of high frequency harmonics caused by switching operation for the power supply (primary) lines inside the inverter. Pass the power supply lines together through the ACL for 4 turns (coiled 3 times). If wiring length between the inverter and motor is less than 20 m, insert an ACL to the power supply (primary) lines; if it is more than 20 m, insert it to the power output (secondary) lines of the inverter.
Options for Operation and Communications	External potentiometer for frequency commands	An external potentiometer may be used to set the drive frequency. Connect the potentiometer to control signal terminals [11] to [13] of the inverter.
	Remote keypad	This allows you to perform remote operation of the inverter. With the remote keypad, you can copy function code data configured in the inverter to any other inverter. Keypad models: TP-E1U and TP-E1
	Extension cable for remote operation	The extension cable connects the remote keypad with the inverter for remote operation. It is also used for connection of a USB–RS-485 converter. Three lengths are available: 5 m, 3 m and 1 m
	USB–RS-485 converter	A converter is used to easily connect the RS-485 communications port to a USB port on a PC. (Products supplied by System Sacom Sales Corporation are recommended.)
	Inverter loader software	Windows-based inverter loader software that makes it easy to configure function code data via the GUI (graphical user interface).
Other peripheral equipment	Surge absorbers	A surge absorber suppresses surge currents and noise from the power lines to ensure effective protection of your power system from the malfunctioning of the magnetic contactors, mini-relays and timers.
	Surge killers	A surge killer eliminates surge currents induced by lightening and noise from the power supply lines. Use of a surge killer is effective in preventing the electronic equipment, including inverters, from damage or malfunctioning caused by such surges and/or noise.
	Arresters	An arrester suppresses surge currents and noise invaded from the power supply lines. Use of an arrester is effective in preventing electronic equipment, including inverters, from damage or malfunctioning caused by such surges and/or noise.
	Frequency meter	Displays the frequency in accordance with signal output from the inverter.

Chapter 10 APPLICATION OF DC REACTORS (DCRs)

Since the "Japanese Guideline for Suppressing Harmonics in Home and General-purpose Appliances" issued by the Ministry of International Trade and Industry (Currently the Ministry of Economy, Trade and Industry) was revised in January 2004, the general-purpose inverters have no longer been subject to the guideline. Individual inverter manufacturers have voluntarily employed harmonics suppression measures. It is recommended that DC reactors (DCRs) specified in Table 10.1 be connected to the FRENIC-Mini series of inverters.

Table 10.1 List of DC Reactors (DCRs)

Power supply voltage	Nominal applied motor (kW)	Applicable inverter type	DCR type
Three-phase 200 V	0.1	FRN0001C2S-2☐	DCR2-0.2
	0.2	FRN0002C2S-2☐	
	0.4	FRN0004C2S-2☐	DCR2-0.4
	0.75	FRN0006C2S-2☐	DCR2-0.75
	1.5	FRN0010C2S-2☐	DCR2-1.5
	2.2	FRN0012C2S-2☐	DCR2-2.2
	3.7	FRN0020C2S-2☐	DCR2-3.7
Single-phase 200 V	0.1	FRN0001C2S-7☐	DCR2-0.2
	0.2	FRN0002C2S-7☐	DCR2-0.4
	0.4	FRN0004C2S-7☐	DCR2-0.75
	0.75	FRN0006C2S-7☐	DCR2-1.5
	1.5	FRN0010C2S-7☐	DCR2-2.2
	2.2	FRN0012C2S-7☐	DCR2-3.7

Note: A box (☐) in the above table replaces A, C, E, or U depending on the shipping destination. For three-phase 200 V class series of inverters, it replaces A or U.

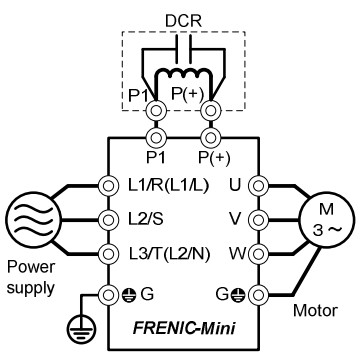

Figure 10.1 Connection Diagram of DC Reactor (DCR)

Chapter 11 COMPLIANCE WITH STANDARDS

11.1 Compliance with European Standards

The CE marking on Fuji products indicates that they comply with the essential requirements of the Electromagnetic Compatibility (EMC) Directive 2004/108/EC issued by the Council of the European Communities and Low Voltage Directive 2006/95/EC.

Inverters that bear a CE marking are compliant with the Low Voltage Directive.

The products comply with the following standards:

Low Voltage Directive	EN61800-5-1:	2007
EMC Directives	EN61800-3:	2004 +A1: 2012
	Immunity:	Second environment (Industrial)
	Emission:	Category C2 (Applicable only when an optional EMC-compliant filter is attached)

CAUTION

The FRENIC-Mini series of inverters are categorized as a "restricted sales distribution class" of the EN61800-3. When you use these products with any home appliances or office equipment, you may need to take appropriate countermeasures to reduce or eliminate any noise emitted from these products.

11.2 Compliance with EMC Standards

11.2.1 General

The CE marking on inverters does not ensure that the entire equipment including our CE-marked products is compliant with the EMC Directive. Therefore, CE marking for the equipment shall be the responsibility of the equipment manufacturer. For this reason, Fuji's CE mark is indicated under the condition that the product shall be used within equipment meeting all requirements for the relevant Directives. Instrumentation of such equipment shall be the responsibility of the equipment manufacturer.

Generally, machinery or equipment includes not only our products but other devices as well. Manufacturers, therefore, shall design the whole system to be compliant with the relevant Directives.

In addition, to satisfy the requirements noted above, use a Fuji FRENIC inverter in connection with an EMC-compliant filter (optional feature) in accordance with the instructions contained in this instruction manual. Installing the inverter(s) in a metal panel may be necessary, depending upon the operating environment of the equipment that the inverter is to be used with.

11.2.2 Recommended installation procedure

To make the machinery or equipment fully compliant with the EMC Directive, have certified technicians wire the motor and inverter in strict accordance with the procedure described below.

■ In case an outboard, EMC-compliant (optional) is used

1) Install the inverter and the filter on a grounded metal plate. Use a shielded cable also for connection of the motor. Make the motor cable as short as possible. Connect the shielding layer firmly to the metal plate. Also connect the shielding layer electrically to the grounding terminal of the motor.
2) Use shielded cable for connection around the control terminals of the inverter and also for connection of the RS-485 signal cable. As with the motor, clamp the shielding layer firmly to a grounded plate.
3) If noise from the inverter exceeds the permissible level, enclose the inverter and its peripherals within a metal panel as shown in Figure 11.1.

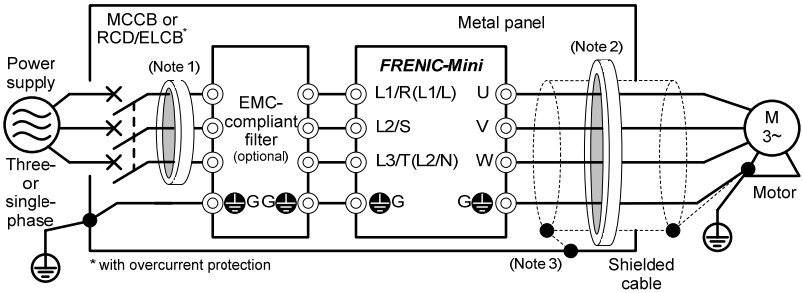

Figure 11.1 Installing the Inverter with EMC-compliant filter into a Metal Panel

Note 1: Pass the EMC filter input wires through the ferrite ring reactor for reducing radio noise (ACL-40B) two times.

Note 2: Pass the EMC filter output wires (shielded cable and grounding wire in a bundle) through the ferrite ring reactor for reducing radio noise (ACL-40B) two times.

Note 3: Connect the shielding layer of the shielded cable to the motor and panel electrically and ground the motor and panel.

Note Radiated noise varies greatly depending upon the installation environment. When no ferrite ring reactor is used, make sure that the radiated noise does not exceed the permissible level.

11.2.3 Leakage current of EMC-complaint filter (optional)

Table 11.1 Leakage Current of EMC-compliant Filter (optional)

Inverter type		Filter type	Leakage current (mA) *1), *2)	
For Japan	For other countries		Normal	Worst
FRN0.1C2S-2J	FRN0001C2S-2□	FS5956-6-46 (EFL-0.75E11-2)	3.0	3.0
FRN0.2C2S-2J	FRN0002C2S-2□			
FRN0.4C2S-2J	FRN0004C2S-2□			
FRN0.75C2S-2J	FRN0006C2S-2□			
FRN1.5C2S-2J	FRN0010C2S-2□	FS5956-26-47 (EFL-4.0E11-2)	3.0	3.0
FRN2.2C2S-2J	FRN0012C2S-2□			
FRN3.7C2S-2J	FRN0020C2S-2□			
FRN0.4C2S-4J	FRN0002C2S-4□	FS20229-3, 5-07	3.0	18.0
FRN0.75C2S-4J	FRN0004C2S-4□			
FRN1.5C2S-4J	FRN0005C2S-4□	FS20229-9-07	3.0	18.0
FRN2.2C2S-4J	FRN0007C2S-4□			
FRN3.7C2S-4J	FRN0011C2S-4□	FS20229-13-07	3.0	18.0
FRN0.1C2S-7J	FRN0001C2S-7□	FS8082-10-07	4.0	8.1
FRN0.2C2S-7J	FRN0002C2S-7□			
FRN0.4C2S-7J	FRN0004C2S-7□			
FRN0.75C2S-7J	FRN0006C2S-7□			
FRN1.5C2S-7J	FRN0010C2S-7□	FS20159-17-07	4.2	8.4
FRN2.2C2S-7J	FRN0012C2S-7□	FS20159-25-07	4.2	8.4

Note: A box (□) in the above table replaces A, C, E, or U depending on the shipping destination. For three-phase 200 V class series of inverters, it replaces A or U.

*1) The values are calculated assuming the power supplies of three-phase 240 V (50 Hz), three-phase 400 V (50 Hz), and single-phase 230 V (50 Hz).

*2) The worst condition includes a phase loss in the supply line.

11.3 Harmonic Component Regulation in the EU

11.3.1 General comments

When you use general-purpose industrial inverters in the EU, the harmonics emitted from the inverter to power lines are strictly regulated as stated below.

If an inverter whose rated input is 1 kW or less is connected to public low-voltage power supply, it is regulated by the harmonics emission regulations from inverters to power lines (with the exception of industrial low-voltage power lines). Refer to Figure 11.2 below for details.

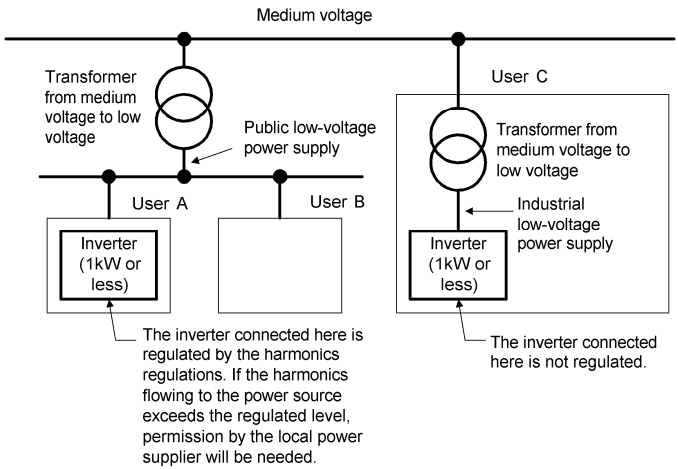

Figure 11.2 Power Source and Regulation

11.3.2 Compliance with the harmonic component regulation

Table 11.2 Compliance with Harmonic Component Regulation

Power supply voltage	Inverter type	w/o DC reactor	w/ DC reactor	Applicable DC reactor type
Three-phase 200 V	FRN0001C2S-2☐	√ *	√ *	DCR2-0.2
	FRN0002C2S-2☐	√ *	√ *	DCR2-0.2
	FRN0004C2S-2☐	√ *	√ *	DCR2-0.4
	FRN0006C2S-2☐	√ *	√ *	DCR2-0.75
Three-phase 400 V	FRN0002C2S-4☐	—	√	DCR4-0.4
	FRN0004C2S-4☐	—	√	DCR4-0.75
Single-phase 200 V	FRN0001C2S-7☐	—	√	DCR2-0.2
	FRN0002C2S-7☐	—	√	DCR2-0.4
	FRN0004C2S-7☐	—	√	DCR2-0.75
	FRN0006C2S-7☐	—	—	DCR2-1.5

* Inverter types marked with √ in the table above are compliant with the EN61000-3-2 (+A14), so they may be connected to public low-voltage power supply unconditionally.
Conditions apply when connecting models marked with "—". If you want to connect them to public low-voltage power supply, you need to obtain permission from the local electric power supplier. In general, you will need to provide the supplier with the harmonics current data of the inverter. To obtain the data, contact your Fuji Electric representative.

Note 1) A box (☐) in the above table replaces A, C, E, or U depending on the shipping destination. For three-phase 200 V class series of inverters, it replaces A or U.

2) When supplying three-phase 200 VAC power stepped down from a three-phase 400 VAC power line using a transformer, the level of harmonic flow from the 400 VAC line will be regulated.

11.4 Compliance with the Low Voltage Directive in the EU

11.4.1 General

General-purpose inverters are regulated by the Low Voltage Directive in the EU. Fuji Electric has obtained the proper certification for the Low Voltage Directive from the official inspection agency. Fuji Electric states that all our inverters with CE marking are compliant with the Low Voltage Directive.

11.4.2 Points for consideration when using the FRENIC-Mini series in a system to be certified by the Low Voltage Directive in the EU

If you want to use the FRENIC-Mini series of inverters in systems/equipment in the EU, refer to the guidelines on page viii.

Compact Inverter

FRENIC-Mini

Instruction Manual

First Edition, March 2013
Second Edition, June 2013

Fuji Electric Co., Ltd.

The purpose of this instruction manual is to provide accurate information in handling, setting up and operating of the FRENIC-Mini series of inverters. Please feel free to send your comments regarding any errors or omissions you may have found, or any suggestions you may have for generally improving the manual.

In no event will Fuji Electric Co., Ltd. be liable for any direct or indirect damages resulting from the application of the information in this manual.

Fuji Electric Co., Ltd.

Gate City Ohsaki, East Tower, 11-2, Osaki 1-chome, Shinagawa-ku, Tokyo 141-0032, Japan
Phone: +81 3 5435 7058 Fax: +81 3 5435 7420

URL http://www.fujielectric.com/

2013-06 (F13a/C13)