GEFRAN

ONP1-A

CONTACTLESS MAGNETOSTRICTIVE LINEAR POSITION TRANSDUCER WITH GEFRAN ONDA TECHNOLOGY (ANALOG OUTPUT)

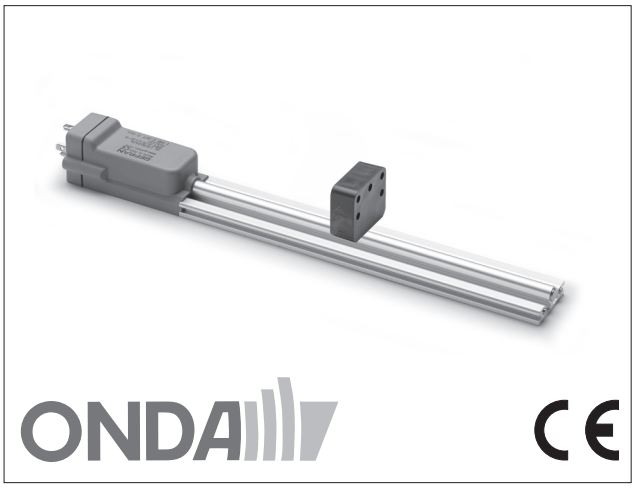

Main characteristics

- *Strokes from 50 to 1500mm*
- *Sliding or floating magnetic cursor*
- *Direct analog output for displacement*
- *Standard valve or M12 connector*
- *Work temperature: -20...+75°C*
- *IP65 protection*
- *Power supply 24Vdc ±20%*

Contactless linear position transducer with innovative GEFRAN ONDA magnetostrictive technology for longer lifetime.
The absence of electrical contact on the cursor eliminates all wearing and guarantees almost unlimited life.
The new ONDA technology solution (patented by Gefran) allows to obtain an essential modular structure with compact size for simple installation.

TECHNICAL DATA

Model	from 50 to 1500 mm
Measurement taken	Displacement
Position read sampling time (typical)	see table
Shock test DIN IEC68T2-27	100g - 11ms - single shock
Vibrations DIN IEC68T2-6	12g / 10...2000Hz
Displacement speed	≤10 m/s
Max. acceleration	≤ 100 m/s² displacement
Resolution	INFINITE (only limited by the electrical noise)
Cursor (see note)	Sliding cursor Floating separate cursor
Working temperature	-20...+75°C
Storage temperature	-40...+100°C
Coefficient of temperature	≤ 0.01% f.s. / °C (min. 0,015mm/°C)
Protection	IP65

ELECTRICAL DATA

Output signal	0,1...10,1V (**W**)	4...20mA (**E**)
Nominal power supply	24 Vdc ±20%	24 Vdc ±20%
Max. power ripple	1Vpp	1Vpp
Output current consumption	35mA	60mA
Output load	≥10KΩ	50... 500Ω
Max. output value	12V	30mA
Alarm output value	10.5 V	21 mA
Electrical isolation	50 V	50 V
Protection against polarity inversion	Yes	Yes
Protection against overvoltage	Yes	Yes
Protection against power supply in output	Yes	Yes

MECHANICAL DIMENSIONS

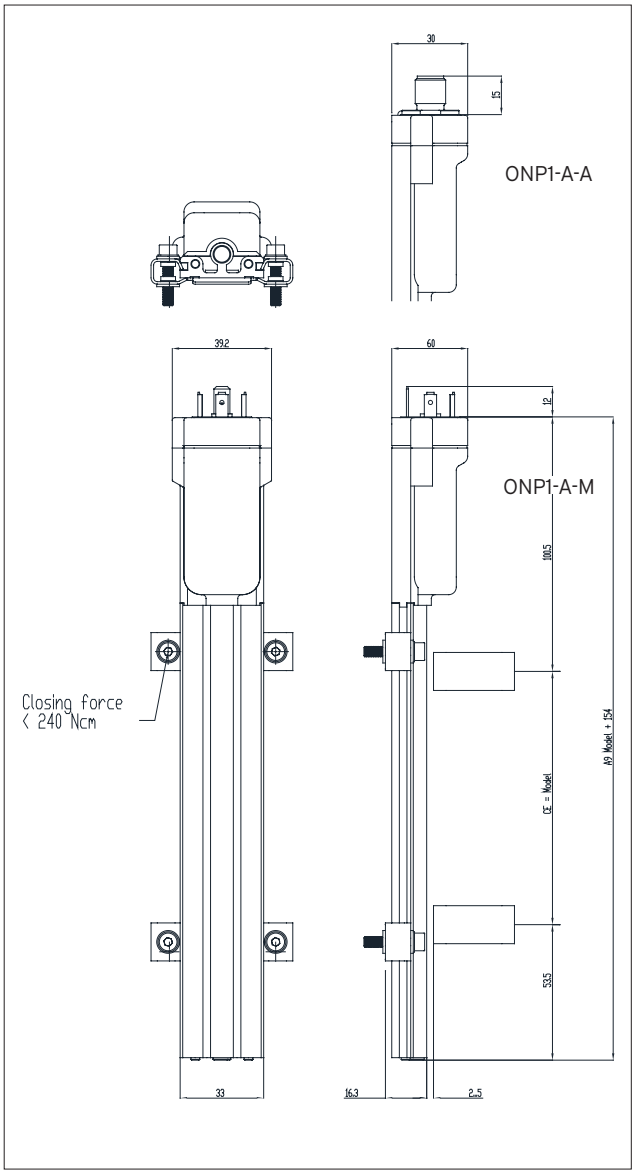

ELECTRICAL / MECHANICAL DATA

Model		50	75	100	130	150	175	200	225	250	300	350	360	400	450	500	550	600	650	700	750	800	850	900	950	1000	1100	1200	1250	1300	1400	1500
Sampling time	ms	1																	1,5						2						3	
Electrical stroke (E.S.)	mm	**Model**																														
Independent linearity		≤ ± 0,04%F.S. (Min. ± 0,090 mm)																														
Max. dimensions (A)	mm	**Model + 154**																														
Repeatability	mm	≤ 0,01 (typical)																														
Hysteresis	mm	≤ 0,02 (typical)																														

ELECTRICAL CONNECTIONS

PIN	FUNCTION
1	Output
2	GND Output
3	n.d.
4	Power supply -
5	Power supply +

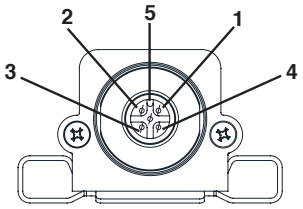

ONP1-A-A

PIN	FUNCTION
1	Power supply -
2	Output
3	Power supply +
⏚	Cable Shield (must be connected to the panel side, too)

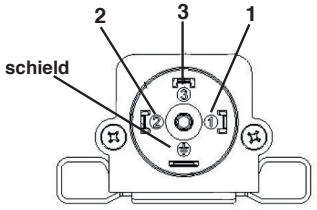

ONP1-A-M

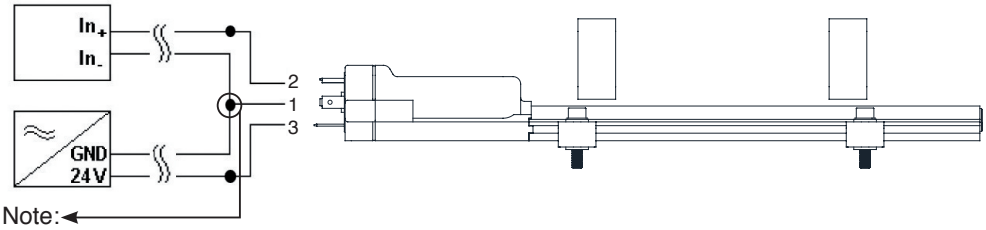

Note:
Make a connection as close as possible to transducer

ANALOG OUTPUT

The ONP1-A magnetostrictive transducers provide a direct voltage or current analogue output proportional to the magnetic cursor's position.
Since the output is direct, no signal electronic processing is required if interfaced with controllers or measurement instruments.

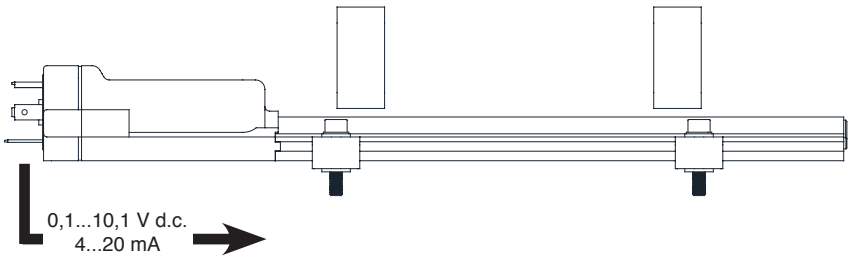

ORDER CODE

Position transducer O N P 1 A ☐ ☐ ☐ ☐ ☐ ☐ — 0 0 0 0 X 0 0 0 X 0 0 X 0 X X

Analog output	**A**

Connector	
4 pin connector output DIN 43650 ISO4400	**M**
5 pin connector output M12	**A**

Model

Output		
0,1...10,1 V d.c.	1 cursor only for direct output	**W**
4...20mA	1 cursor only for direct output	**E**

GEFRAN spa reserves the right to make aesthetic or functional changes at any time and without notice

CURSORS ON REQUEST

P C U R ☐ ☐ ☐

Cursors	
Floating Cursor	**039**
Sliding cursor , axial joint low	**135**
Sliding cursor , axial joint high	**136**
Sliding cursor , axial joint angle	**137**

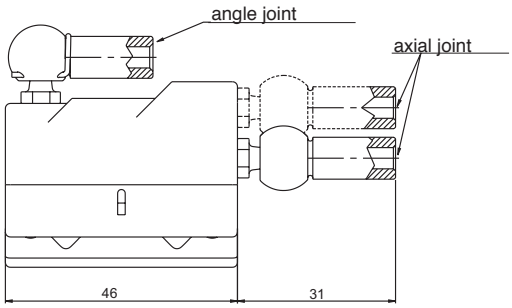

PCUR039

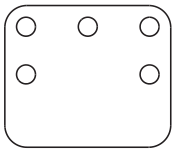

PCUR135

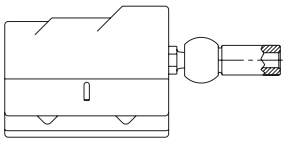

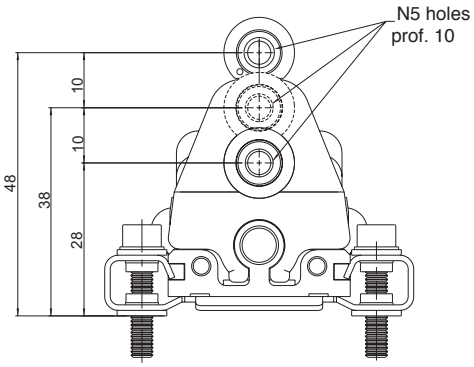

PCUR136

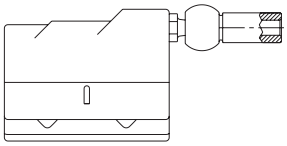

PCUR137

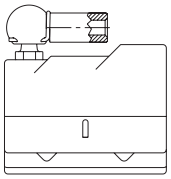

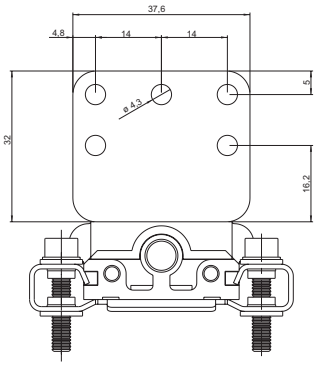

BRACKETS ON REQUEST

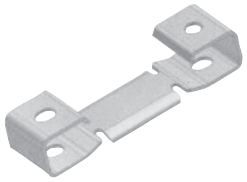

P K I T ☐ ☐ ☐

Brackets (2 brackets for every kit)	
Steel brackets, interaxis 42.5mm	**590**
Steel brackets, interaxis 50mm	**591**

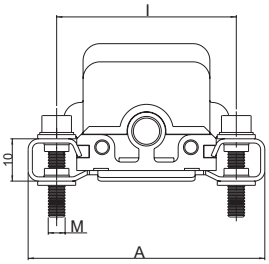

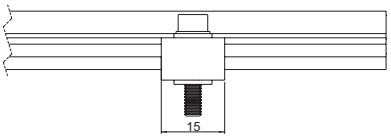

Brackets code	Interaxis (i)	Screw (V)	Dimension (A)
PKIT590	42.5	**M4**	**56**
PKIT591	50	**M5**	**63.5**

FEMALE CONNECTORS

ON REQUEST

4-pin 90° radial female connector DIN43650 IP65 PG9 clamp for ø6-ø8 mm cable	**CON006**
5-pin, axial female connector M12, IP67, clamp for ø6,5 mm cable	**CON031**
5-pin 90° radial female connector M12, IP67 clamp for ø6-ø8 mm cable	**CON041**