M-10592 | 1

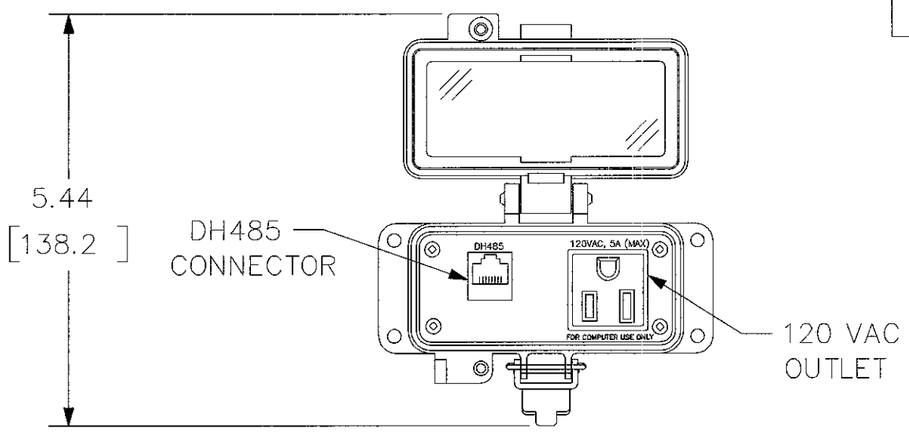

TOP VIEW WITH COVER OPEN

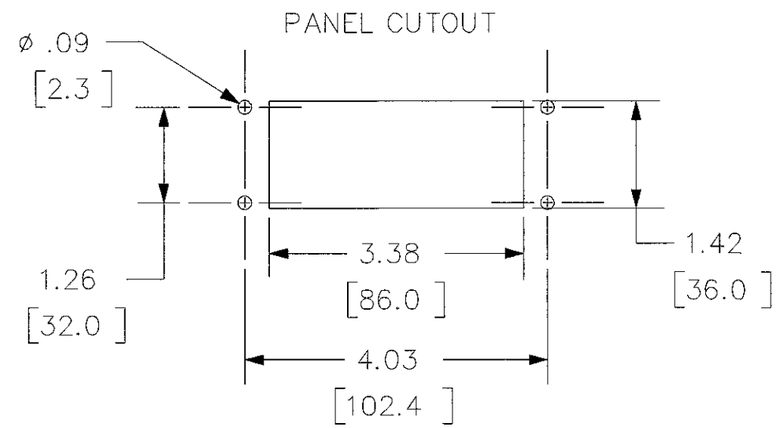

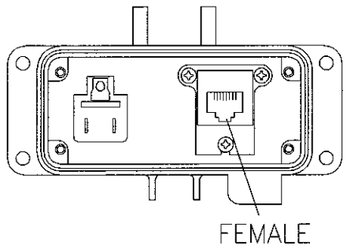

BOTTOM VIEW WITH COVER &
HINGE OMITTED FOR CLARITY

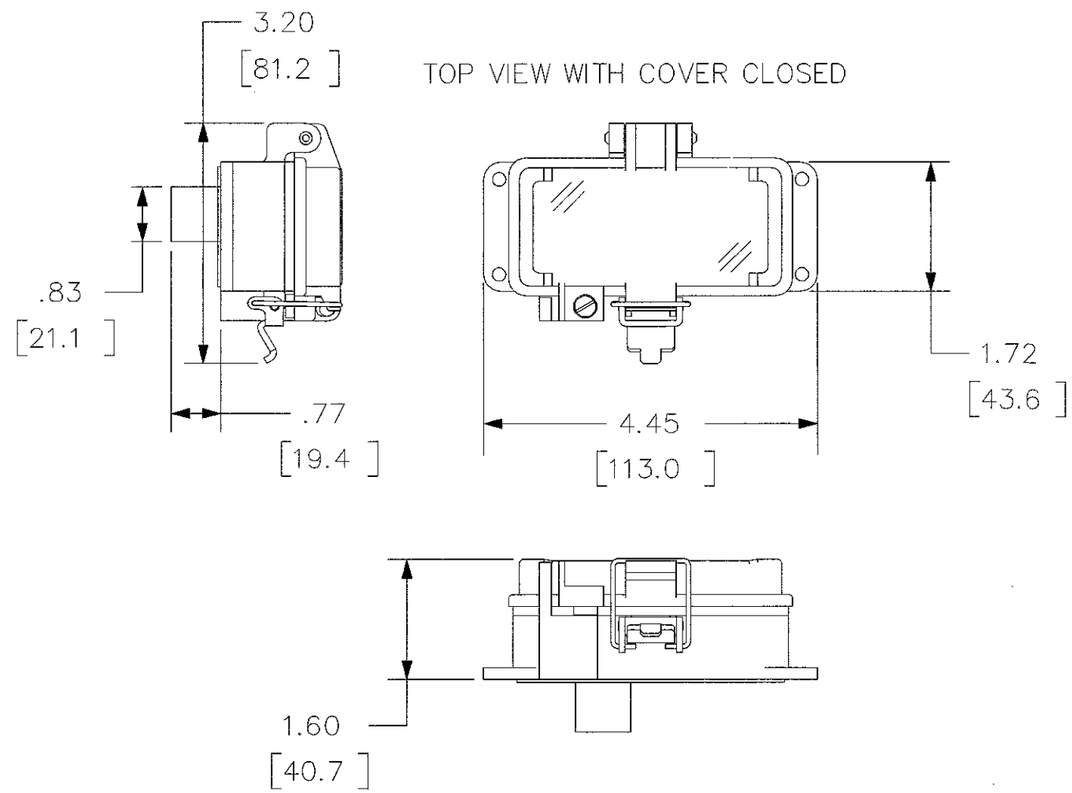

NOTE: NOMINAL DIMENSIONS – FOR REFERENCE ONLY

CATALOG NO.	ENCLOSURE RATING	DESCRIPTION
P15DH485C10	NEMA 4/12	DH485, 15A/120VAC

LIST OF PARTS

DESCRIPTION	MATERIAL	FINISH

DIMENSION SHEET FOR CAT. NO.
SEE TABLE

REPAIRABLE ☐ NON-REPAIRABLE ☐

SYM	REVISIONS	APP	DATE
1	INITIAL RELEASE PER DCN. 13880 RCM	JPP	4/18/07

THE DESIGN AND DIMENSIONS OF THE PRODUCT SHOWN ON THIS DRAWING ARE SUBJECT TO CHANGE WITHOUT NOTICE

TITLE PANEL–SAFE, DH485
15A/120VAC, NEMA 4/12

TOLERANCES UNLESS OTHERWISE SPECIFIED
FRACTIONS ±1/64
DECIMALS ±.005
ANGLES ±2°

WIRING DEVICE–KELLEMS
HUBBELL INCORPORATED
BRIDGEPORT, CT

DR. BY RCM	APP. BY JPP
TR. BY	SCALE 1:2
CHK'D BY JPP	DATE 4/18/07

B

M-10592

1

CODE 74545