M-13867	1

CONCENTRIC KNOCKOUTS		
LOCATION	QUANTITY	TRADE SIZE
ENDS	2/END	3/4", 1", 1-1/4" SEE NOTE 7
SIDES	2/SIDE	1/2", 3/4", 1", 1-1/4"
BOTTOM	4	1/2", 3/4", 1", 1-1/4"

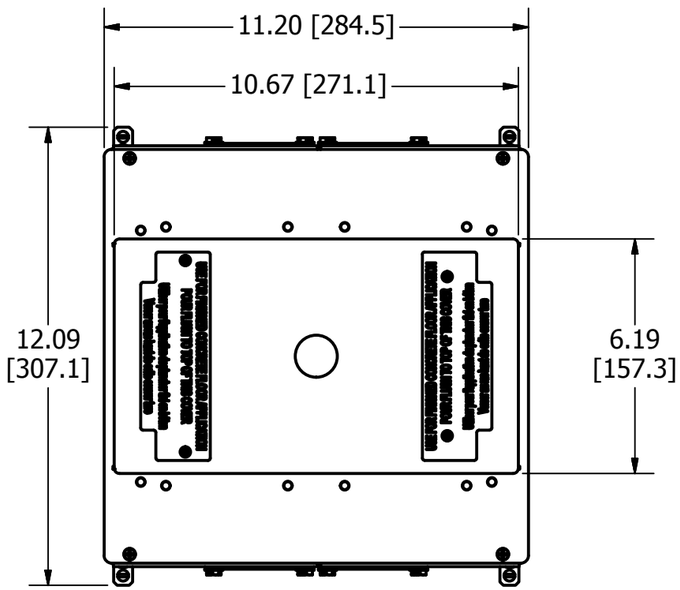

TOP VIEW

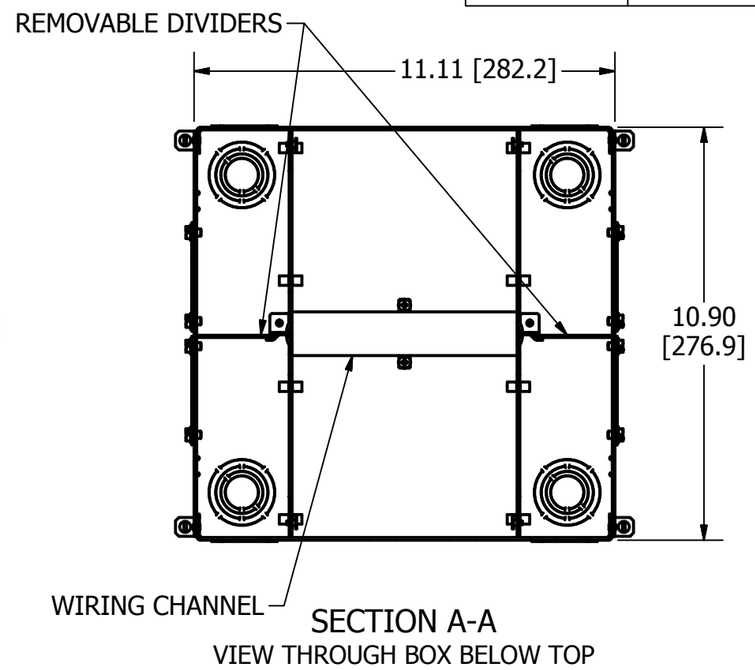

SECTION A-A
VIEW THROUGH BOX BELOW TOP

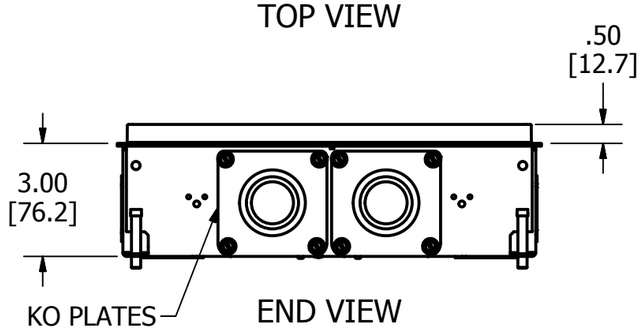

END VIEW

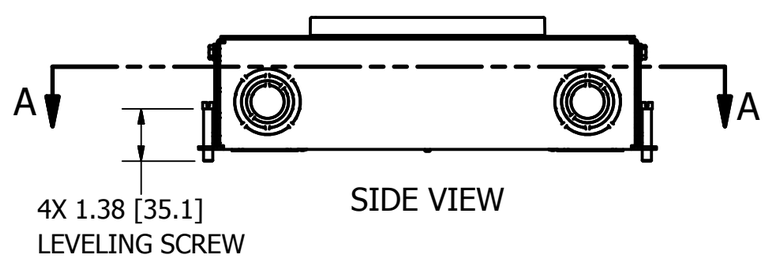

SIDE VIEW

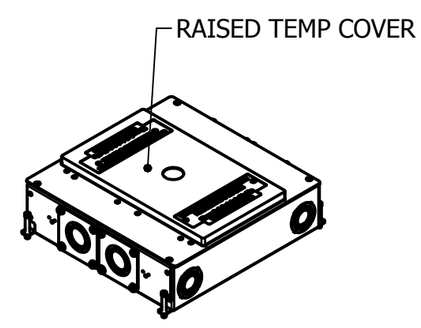

ISOMETRIC

NOTES:
1. ALL DIMENSIONS ARE IN INCHES AND [MILLIMETERS].
2. PRODUCT IS cULus LISTED. COMPLIES WITH UL 514A.
3. EACH GANG SUPPLIED WITH 6" [152.4] 12 GA. AWG GROUND PIGTAIL.
4. MINIMUM CONCRETE POUR: 3.00" [76.2].
5. WIRING CHAMBER VOLUMES (RECESSED COVER) : (4) 32.5 IN^3 [632.6 CM^3].
6. WIRING CHANNEL AREA: (2) .40 IN^2 [261 MM^2].
7. WIRING CHAMBER VOLUMES (FURNITURE FEED) : (2) 118 IN^3 [1934 CM^3].
8. 2" TRADE SIZE CONDUIT HUBS (CFBHUB2) MAY BE USED IN PLACE OF KO PLATES, SOLD SEPARATELY.

CAGE CODE 74545

LIST OF PARTS

DESCRIPTION	MATERIAL	FINISH
BOX ASSEMBLY	16 GA. STEEL	ZINC **
TOP MOUNTING ASSY	14 GA. STEEL	ZINC
GROUND WIRES	COPPER	
WIRING CHANNEL	16 GA. STEEL	ZINC
REMOVABLE DIVIDERS	THERMOPLASTIC	
FASTENERS	STEEL	ZINC
FLUSH TEMP COVER	16 GA. STEEL	ZINC
RAISED TEMP COVER	THERMOPLASTIC	YELLOW

** CATALOG NO. CFB4G30CR BOX ASSEMBLY IS GALVANIZED AND EPOXY COATED ON EXTERIOR SURFACE.

REV	DESCRIPTION	APP	DATE
1	RELEASED PER DCN 23642	SBW	3/19/18

THE DESIGN AND DIMENSIONS OF THE PRODUCT SHOWN ON THIS DRAWING ARE SUBJECT TO CHANGE WITHOUT NOTICE. DIMENSIONS ARE IN INCHES [mm].

TITLE
CONCRETE FLOOR BOX, 4 GANG FOR RECTANGULAR COVER, DEEP

WIRING DEVICE-KELLEMS
HUBBELL INCORPORATED
SHELTON, CT

TOLERANCES UNLESS OTHERWISE SPECIFIED
.XX = ± .01
.XXX= ± .005
ANGLE TOL. ±2'

DR. BY	SBW	SCALE	1/4
CHK. BY		DATE	3/5/2018

DIMENSION SHEET FOR CAT. NO.
CFB4G30, CFB4G30CR

B

M-13867

1