M-9749 | 1

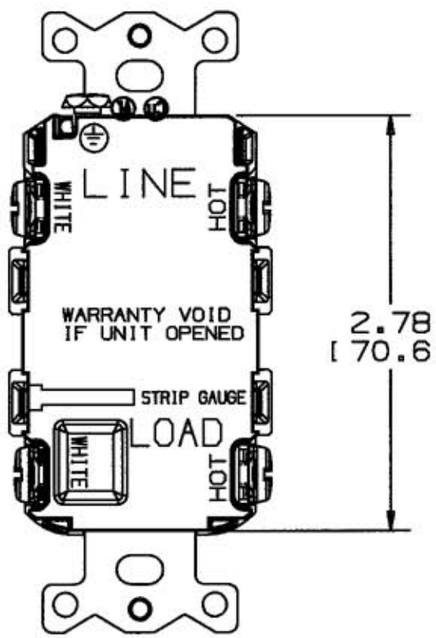

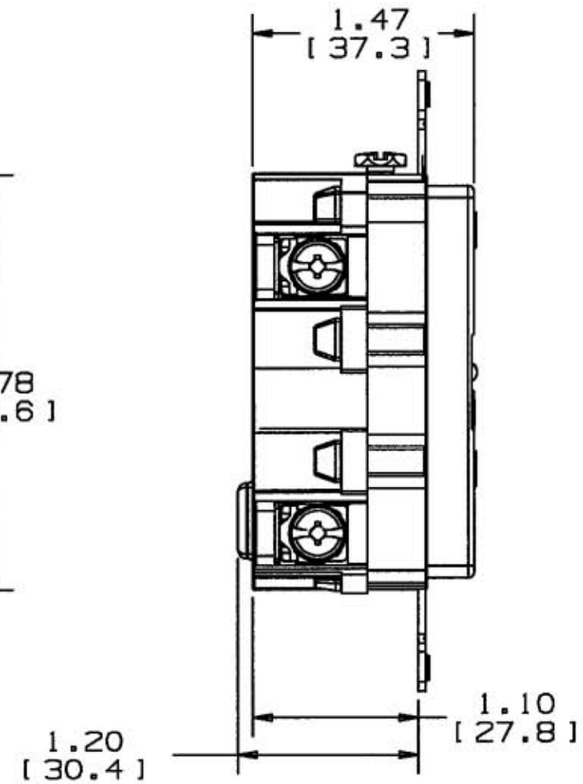

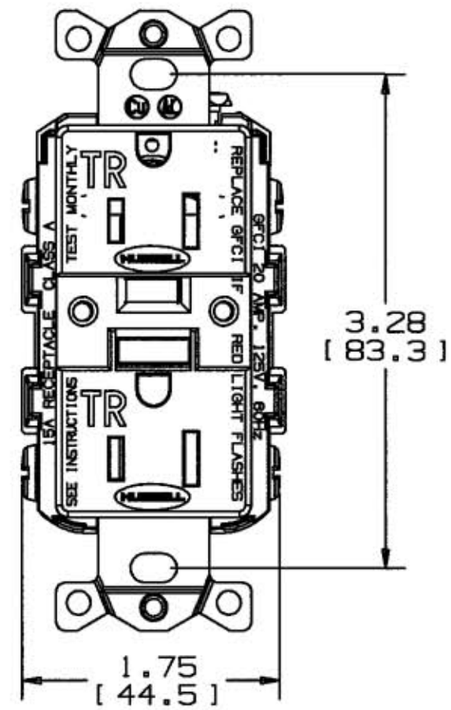

15A TAMPER RESISTANT SELF TEST G.F.C.I.	
INDUSTRIAL GRADE	HOSPITAL GRADE
GFR5262SG - COLOR BROWN	GFR8200SG - COLOR BROWN
GFR5262SGI - COLOR IVORY	GFR8200SI - COLOR IVORY
GFR5262SGW - COLOR WHITE	GFR8200SGW - COLOR WHITE
GFR5262SGGY - COLOR GRAY	GFR8200SGGY - COLOR GRAY
GFR5262SGR - COLOR RED	GFR8200SGR - COLOR RED
GFR5262SGBK - COLOR BLACK	GFR8200SGBK - COLOR BLACK

LIST OF PARTS

DESCRIPTION	MATERIAL	FINISH

DIMENSION SHEET FOR CAT. NO.
SEE TABLE

REPAIRABLE ☐ NON-REPAIRABLE ☐

SYM	REVISIONS	APP	DATE
1	RELEASED FOR PRODUCTION PER DCN 13581 SM	SM	11.27.06.

THE DESIGN AND DIMENSIONS OF THE PRODUCT SHOWN ON THIS DRAWING ARE SUBJECT TO CHANGE WITHOUT NOTICE

TITLE 15 AMP TAMPER RESISTANT GFCI

TOLERANCES UNLESS OTHERWISE SPECIFIED
FRACTIONS ±1/64
DECIMALS ±.005
ANGLES ±2°

WIRING DEVICE-KELLEMS
HUBBELL INCORPORATED
BRIDGEPORT, CT

DR. BY SM	APP. BY SM
TR. BY	SCALE NONE
CHK'D BY SM	DATE 4.6.5

B

M-9749

1

CODE 74545