M-10385 | 1

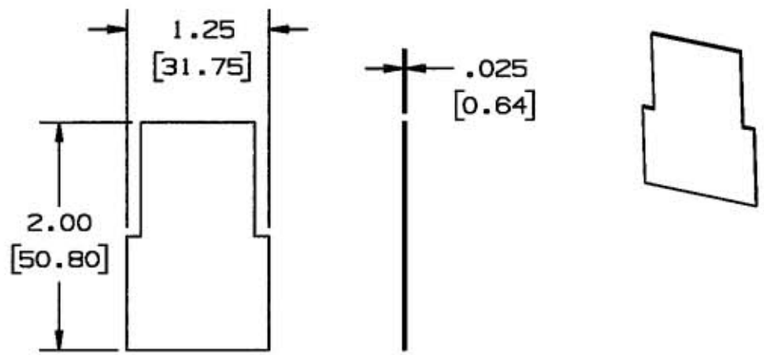

FIBER BUSHING FOR	
CAT. NO.	COLOR
HBL2017TC	BLACK

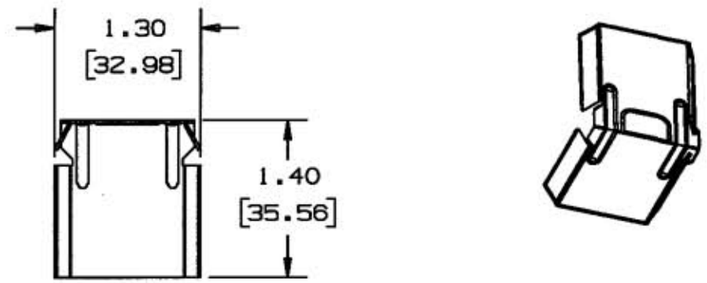

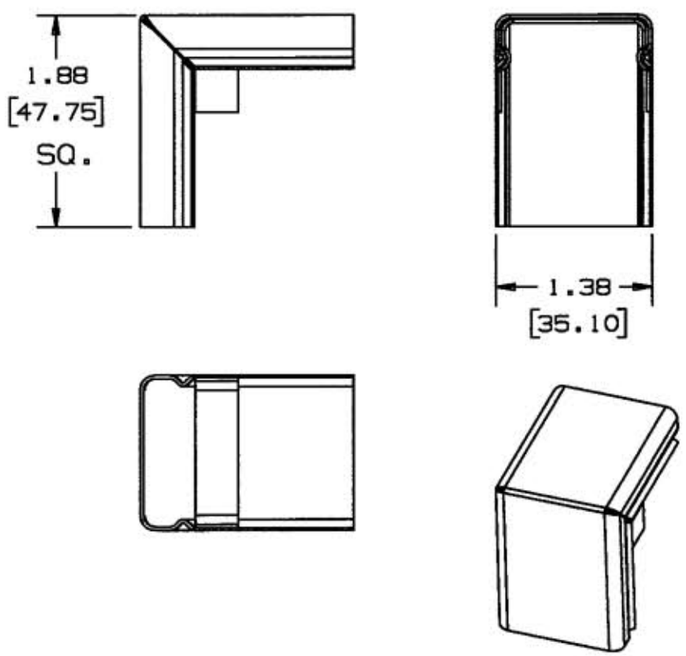

EXTERNAL ELBOW COVER & ELBOW CLIP ASSEMBLY	
CAT. NO.	COLOR
HBL2018CIV	IVORY
HBL2018CGY	GRAY

NOTE: ALL DIMENSIONS IN INCHES AND [MM]

INTERNAL CORNER COUPLING
CAT. NO. HBL2017TC

CODE 74545

LIST OF PARTS

DESCRIPTION	MATERIAL	FINISH
ELBOW CLIP	STEEL	PAINTED
ELBOW COVER	STEEL	PAINTED
INTERNAL CORNER COUPLING	STEEL	GALVANIZED
FIBER BUSHING	INSULATOR	BLACK

SYM	REVISIONS	APP	DATE
1	RELEASED PER DCN13549		11/14/06

THE DESIGN AND DIMENSIONS OF THE PRODUCT SHOWN ON THIS DRAWING ARE SUBJECT TO CHANGE WITHOUT NOTICE

TITLE
ELBOWS
HBL2000 SERIES

TOLERANCES UNLESS OTHERWISE SPECIFIED
FRACTIONS ± 1/64
DECIMALS ± .005
ANGLES ± 2°

WIRING DEVICE-KELLEMS
HUBBELL INCORPORATED
BRIDGEPORT, CT

DR. BY SRE	APP. BY
TR. BY	SCALE 1:1
CHK'D BY	DATE 11/14/06

DIMENSION SHEET FOR CAT. NO. SEE TABLE

REPAIRABLE ☐ NON-REPAIRABLE ☒

B

M-10385

1