M-10350 | 3

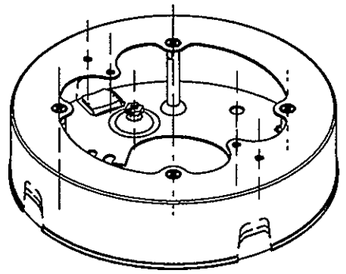

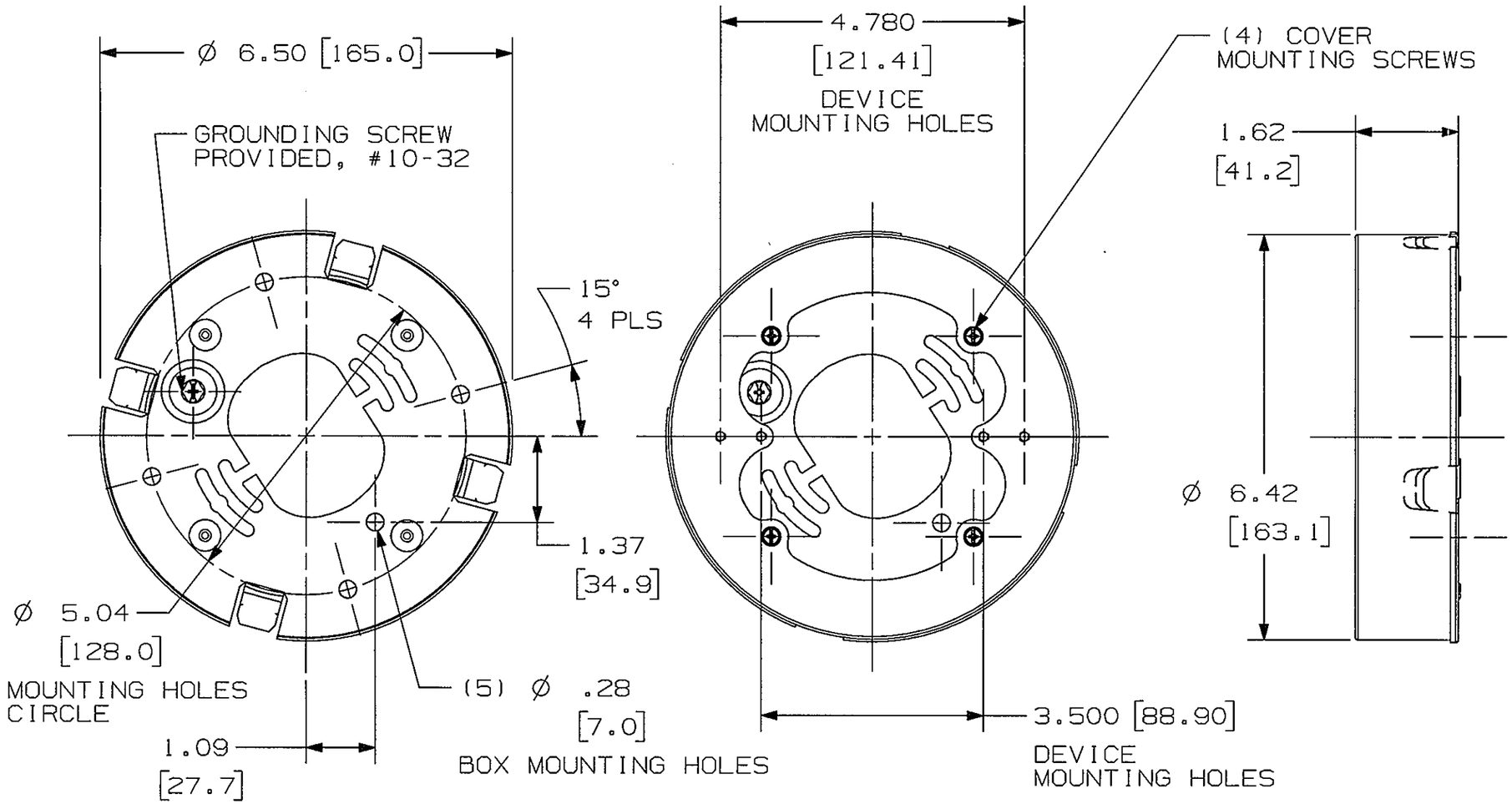

VOLUME OF BOX: 46.1 in³ [755 cm³]

NOTES:
1) ALL DIMENSIONS IN INCHES AND [MM]
2) NON "A" VERSION CATALOG NUMBERS FOR USE WITH HBL500 & HBL750 RACEWAYS ONLY. NON "A" VERSION CATALOG NUMBERS WILL BE PHASED OUT.

CAT. NO.	COLOR
HBL5739AABIVA	IVORY
HBL5739AABWA	WHITE

LIST OF PARTS

DESCRIPTION	MATERIAL	FINISH
BOX BASE	STEEL	GALVANIZED
BOX COVER	STEEL	PAINTED
STANDOFFS	STEEL	GALVANIZED
SCREWS	STEEL	GALVANIZED

SYM	REVISIONS	APP	DATE
3	UPDATED COVER KOS, ADDED HBL700 RACEWAY, ADDED "A" AT END OF CAT NOS.DCN19741	SRE	4/3/13
2	ADDED TABLE & HBL5739AABW; SEE TABLE WAS HBL5739AABIV PER DCN 15094 RCM	DJP	8/19/08
1	RELEASED PER DCN 13596	SRE	12/4/06

THE DESIGN AND DIMENSIONS OF THE PRODUCT SHOWN ON THIS DRAWING ARE SUBJECT TO CHANGE WITHOUT NOTICE

TITLE
ALARM BOX
METAL RACEWAY
HBL500/700/750 SERIES

TOLERANCES UNLESS OTHERWISE SPECIFIED
.XX = ±.01
.XXX = ±.005
ANGLES = ±2°

WIRING DEVICE-KELLEMS
HUBBELL INCORPORATED
SHELTON, CT

DR. BY SRE	APP. BY SRE
TR. BY	SCALE 1:1
CHK. BY SRE	DATE 12/4/06

DIMENSION SHEET FOR CAT. NO. SEE TABLE

REPAIRABLE ☐ NON-REPAIRABLE ☒

B

M-10350

3

CODE 74545