M-8934 | 4

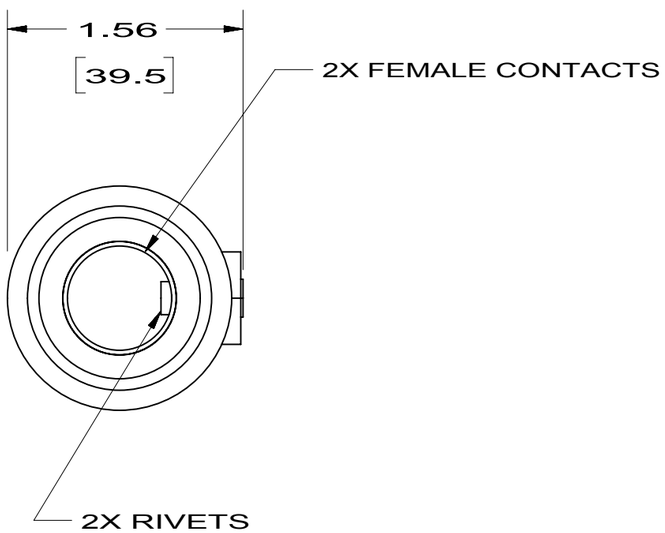

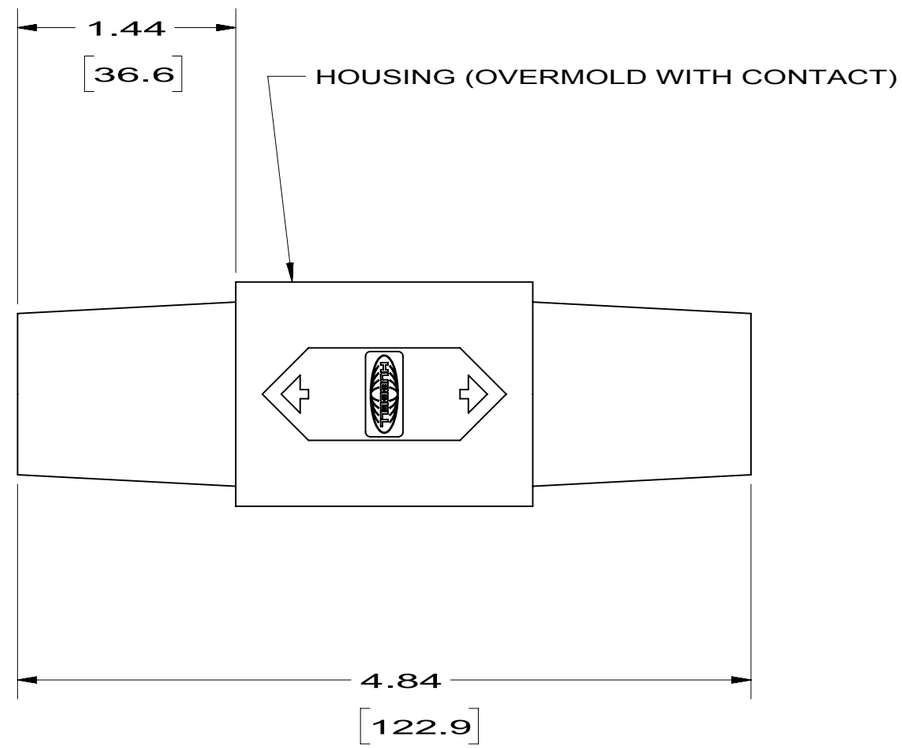

NOTES:
1. DIMENSIONS ARE INCHES ± .02
[mm] ± .5
2. RATING: 600V 400 AMP
3. ENCLOSURE TYPES 3R, 4X, 12, SEE INSTRUCTION SHEET

HUBBELL CAT. NO.	COLOR	cULus
HBLDFBK	BLACK	NO
HBLDFW	WHITE	YES
HBLDFGN	GREEN	YES
HBLDFBR	RED	NO
HBLDFBL	BLUE	NO
HBLDFO	ORANGE	NO
HBLDFBN	BROWN	NO
HBLDFY	YELLOW	NO

LIST OF PARTS

DESCRIPTION	MATERIAL	FINISH
HOUSING	TPE	SEE TABLE
FEMALE CONTACT	BRASS	
RIVET	BRASS	

SYM	REVISIONS	APP	DATE
4	REVISED NOTE 2 FROM 600VAC/250VDC TO 600V PER DCN 23410 RGP	RGP	11/01/17
3	UL FILE REVIEW UPDATE ADDED cULus COLUMN TO TABLE & CHANGED MARKINGS PER DCN 20659 CAC	CAC	08/15/14
2	REMOVE ∅ 1.06 [1.06] & ∅ 1.22 [1.22] ADD ± .02 & ± .5 TO NOTE 1 CHANGED NOTE 3 PER DCN 11484 TwB	TWB	12/15/04
1	RELEASED PER DCN 10992 MJM	TWB	6/25/03

THE DESIGN AND DIMENSIONS OF THE PRODUCT SHOWN ON THIS DRAWING ARE SUBJECT TO CHANGE WITHOUT NOTICE

TITLE
SINGLE POLE
DOUBLE FEMALE
FEMALE/FEMALE

TOLERANCES UNLESS OTHERWISE SPECIFIED
FRACTIONS ± 1/64
DECIMALS ± .005
ANGLES ± 2°

WIRING DEVICE-KELLEMS
HUBBELL INCORPORATED
BRIDGEPORT, CT

DR. BY TwB | APP. BY TwB
TR. BY | SCALE 1:1
CHK'D BY TwB | DATE 6/11/03

DIMENSION SHEET FOR CAT. NO.
SEE TABLE

REPAIRABLE ☐ NON-REPAIRABLE ☒

B

M-8934

4

CODE 74545