M112741

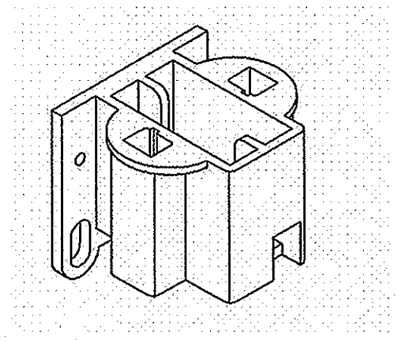

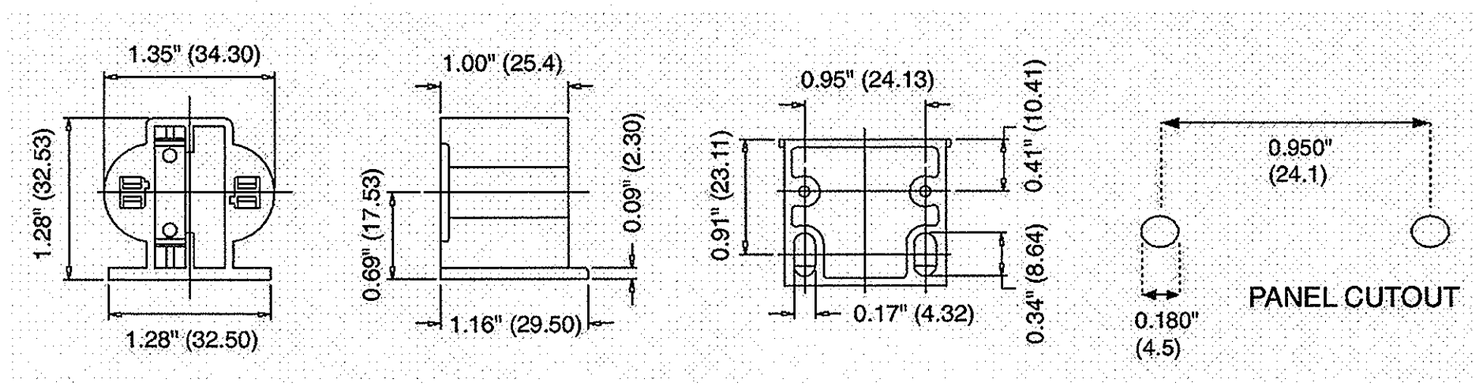

NOTES:

1. DIMENSIONS ARE mm [INCHES].
2. QUICK CONNECT PUSH-IN WIRE TERMINALS FOR 18 AWG SOLID OR TWIST & TIN, STRIPPED 11.1mm [7/16 IN.]. MAXIMUM 6.5 LBS. CONDUCTOR INSERTION FORCE.
3. SCREW MOUNT INTO 0.6-1 mm [.025-.040 IN.] PANEL THICKNESS. EACH WIRING PORT ACCEPTS 2 WIRES FOR EASY HARNESS WIRING, NO EXTRA JUMPERS OR WIRE NUTS TO ASSEMBLE.
4. c UL US LISTED; c CSA US APPROVED.
5. RATED 75W MAX, 600V MAX.
6. PACKAGING: SEALED IN POLYBAG.
7. DIMENSIONAL TOLERANCE: ±0.05", ±0.010".

LIST OF PARTS

DESCRIPTION	MATERIAL	FINISH
BASE	PLASTIC	WHITE

SYM	REVISIONS	APP	DATE
1	12/01/09 RELEASE TO PRODUCTION PER DCN 16198	CAC	

THE DESIGN AND DIMENSIONS OF THE PRODUCT SHOWN ON THIS DRAWING ARE SUBJECT TO CHANGE WITHOUT NOTICE

TITLE
COMPACT FLUORESCENT LAMPHOLDER, 13W G23X, HORZ, 2 HOLE SCREW MNT

TOLERANCES UNLESS OTHERWISE SPECIFIED
FRACTIONS ± 1/64
DECIMALS ± .005
ANGLES ± 2°

WIRING DEVICE-KELLEMS
HUBBELL INCORPORATED
BRIDGEPORT, CT

DR. BY DLI	APP. BY CAC
TR. BY	SCALE NONE
CHK'D BY	DATE 04/01/09

DIMENSION SHEET FOR CAT. NO. RL413HSM

REPAIRABLE ☐ NON-REPAIRABLE ☒

B

M112741

1

CODE 74545