M11289 | 1

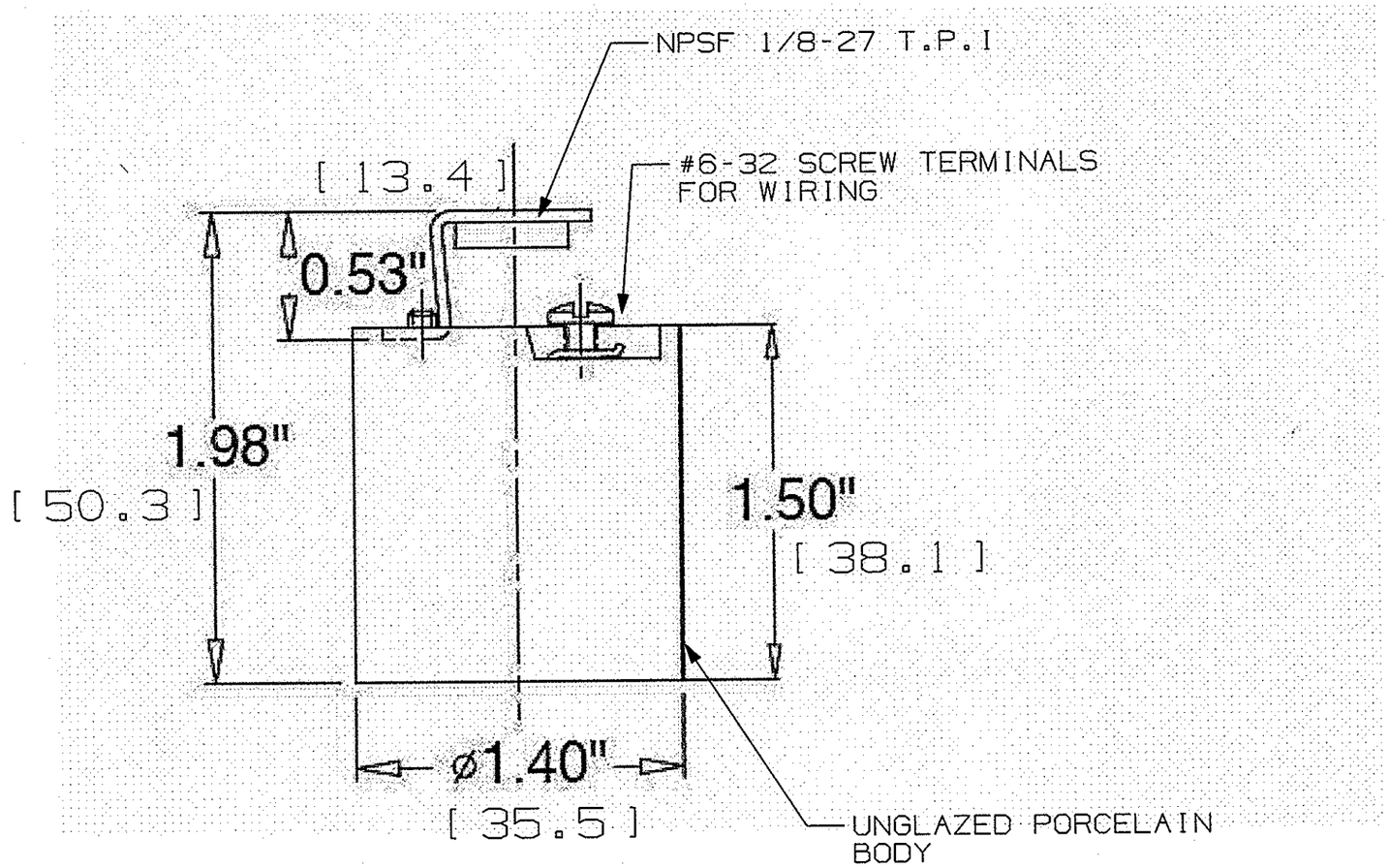

NOTES:

1. DIMENSIONS ARE INCHES [mm].
2. SCREW SHELL COMPLIES TO MEDIUM BASE LAMPHOLDER ANSI-C81.10 STD2-11-1 AND IEC E26.
3. RECOMMENDED WIRE SIZE: 18AWG EXL 125°C, 12" LONG, STRIPPED 1/2".
4. UL LISTED; CSA CERTIFIED.
5. RATED 660W MAX., 250V MAX.
6. PACKAGING: PRODUCT PLACED IN BOX.

LIST OF PARTS

DESCRIPTION	MATERIAL	FINISH
BASE	PORCELAIN	WHITE
SCREW SHELL	ALUM	

SYM	REVISIONS	APP	DATE
1	12/01/09 RELEASE TO PRODUCTION PER DCN 16198	CAC CAC	

THE DESIGN AND DIMENSIONS OF THE PRODUCT SHOWN ON THIS DRAWING ARE SUBJECT TO CHANGE WITHOUT NOTICE

TITLE INCANDESCENT SOCKET MEDIUM BASE 1/2" HKY SCREW TERM

TOLERANCES UNLESS OTHERWISE SPECIFIED
FRACTIONS ±1/64
DECIMALS ±.005
ANGLES ±2°

WIRING DEVICE-KELLEMS
HUBBELL INCORPORATED
BRIDGEPORT, CT

DR. BY DLI	APP. BY
TR. BY	SCALE NONE
CHK'D BY	DATE 04/01/09

DIMENSION SHEET FOR CAT. NO. RL157

REPAIRABLE ☐ NON-REPAIRABLE ☒

B

M11289

1

CODE 74545