netSELECT

Wallplates

Molded-In Voice and C5e Data Frame

Features

- High Impact-Resistant Thermoplastic Construction
- Aesthetically Pleasing, Molded-In Appearance

Ordering Information

Description	Color	CatalogNumber	UPC
Molded-In Voice and Data Decorator Frame, One RJ11 Jack, 6P4C, Screw	Ivory	**NS784I**	883778501890

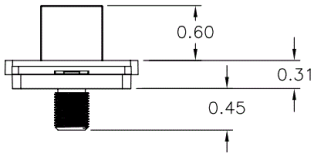

Listings

Meets FCC part 68
UL Listed
CSA Certified
RoHS Compliant

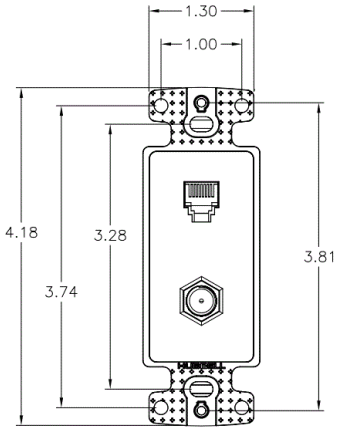

Specifications

Material	High-Impact Resistant Thermoplastic
Phone Termination Style	Screw
Category 5e Termination Style	Punch Down

Accessories

Wallplate	**NP26I**

Online Resources

eCatalog