netSELECT

Jacks

Category 6 Jack

Features

- IDC Pair Splitting Tower Allows for Minimum Disruption to Cable Twist
- Compatible with Standard 110 Termination Tools
- Standard HPW Keystone Mounting
- Backwards Compatible to Category 5e, 5 and 3

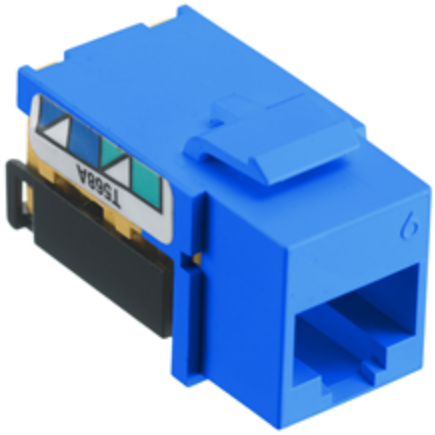

Ordering Information

Description	Color	CatalogNumber	UPC
Category 6 Snap Fit Jack, 24-Pack	Blue	**NSJ6B24**	883778507038

Listings

UL Listed
ANSI/TIA 568-C.2 Category 6 Channel Compliant
RoHS Compliant

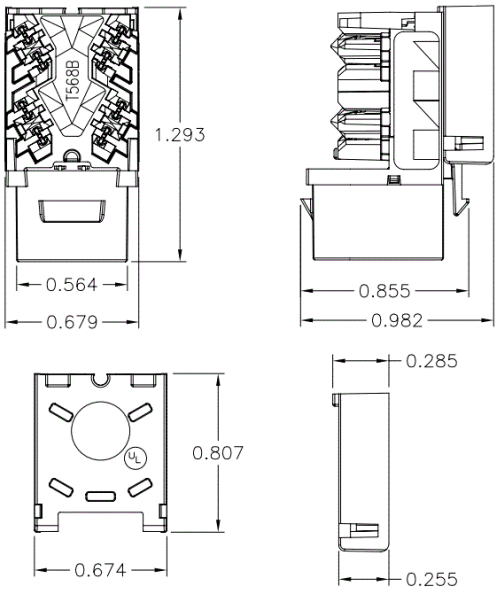

Specifications

Housing Material	High Impact Thermoplastic UL 94 V-0

Applications

Ethernet 10/100/1000BASE-T

Online Resources

eCatalog