4

DIRECT-ON-LINE STARTERS IN ENCLOSURE

M...P

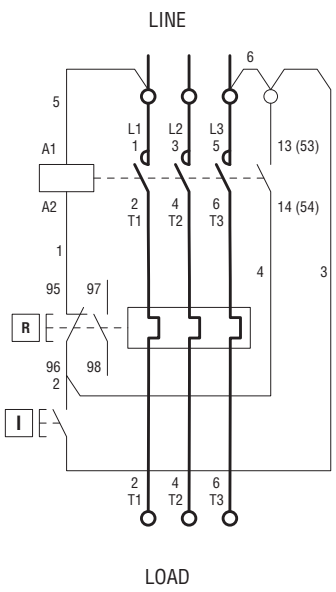

Diagram 1 - Incorporated button control

M...R

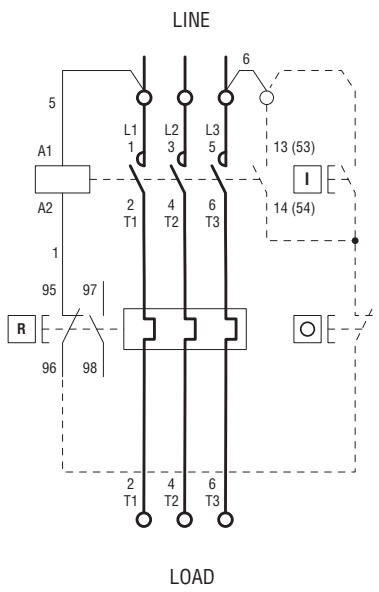

Diagram 2 - External button control

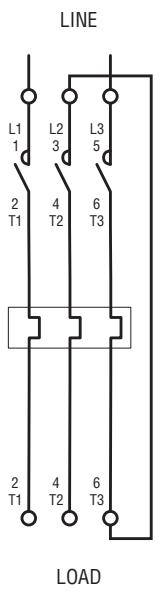

Diagram 3 - Power connection for 1-phase motors

DIAGRAM 2
Connect the eventual two-wire control (e.g. automatism) between terminal .3 of the contactor and terminal 96 of the thermal overload relay.

IMPORTANT
- Remove jumpers 5 and 6 and connect the auxiliary line to terminals A1 and .3 for a control circuit with a voltage value different than the supply.
- Remove jumper 5 and connect the neutral to terminal A1 for a control circuit between phase and neutral.
- SINGLE-PHASE SUPPLY
  The main circuit must be configured according to Diagram 3 in the case of a single-phase line or motor.
- FUSES
  A set of three fuses must be connected upstream of the starter in the event no appropriate protection is included in the system.

REVERSING CONTACTOR ASSEMBLY

BGR...

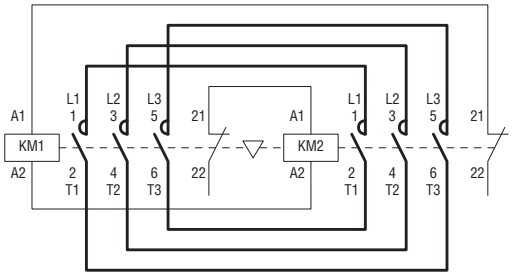

BGT...

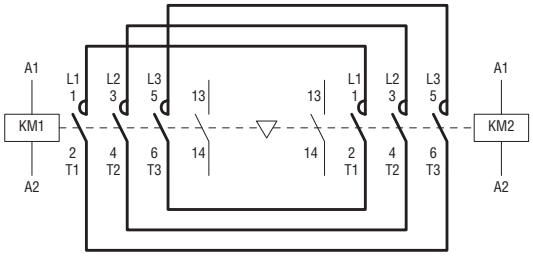

BFA...42

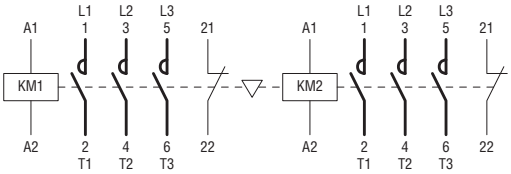

BGTP09...

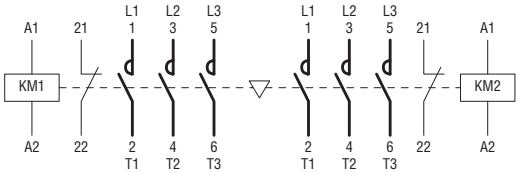

CHANGEOVER CONTACTOR ASSEMBLY

BGC09...

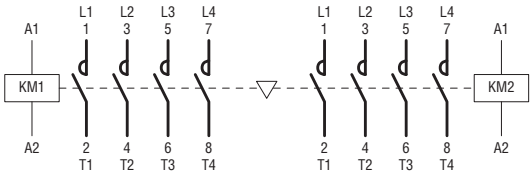

STAR-DELTA STARTERS, OPEN FRAME AND ENCLOSED

BFA009…039 - M3P009…038 70

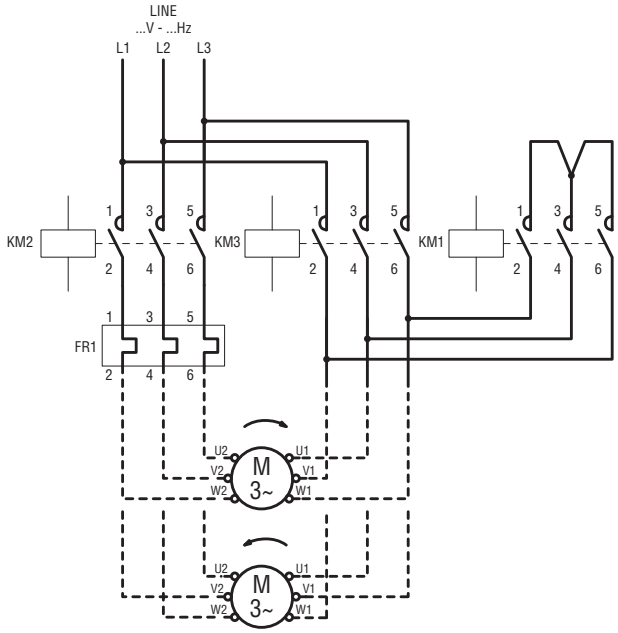

BFA009 70… BFA025 70
M3P009 70…M3P025 70

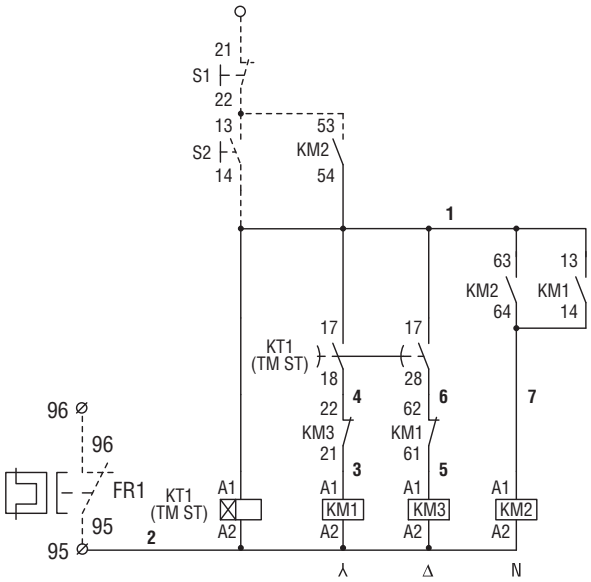

BFA26 70 - BFA038 70
M3P026 70…M3P038 70

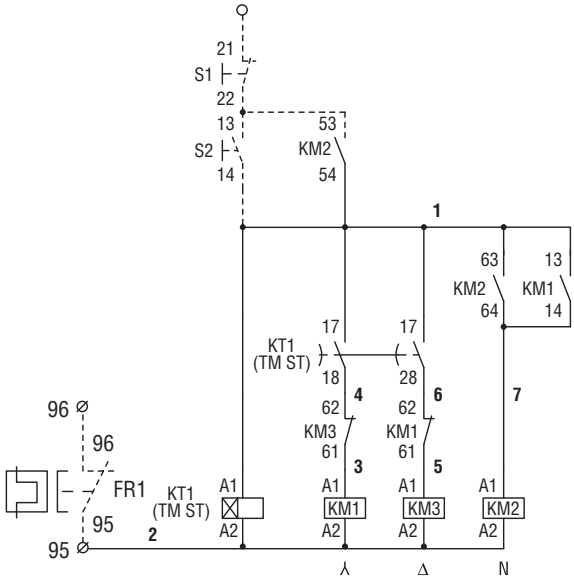

STAR-DELTA STARTERS, OPEN FRAME **DYF50... DYF95**

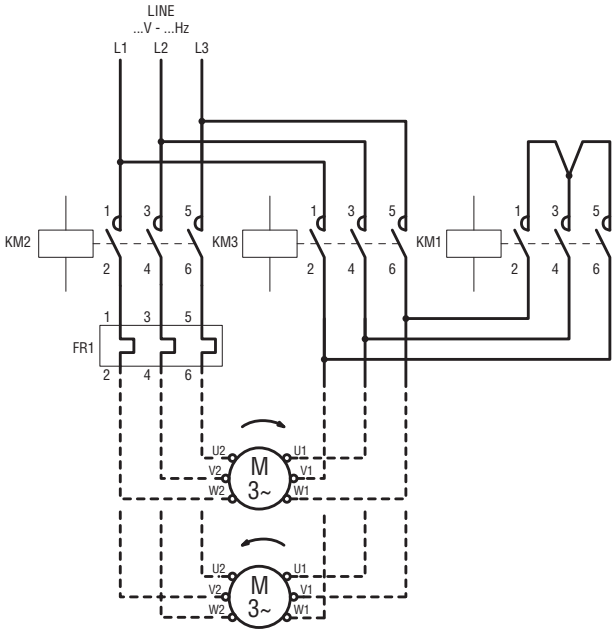

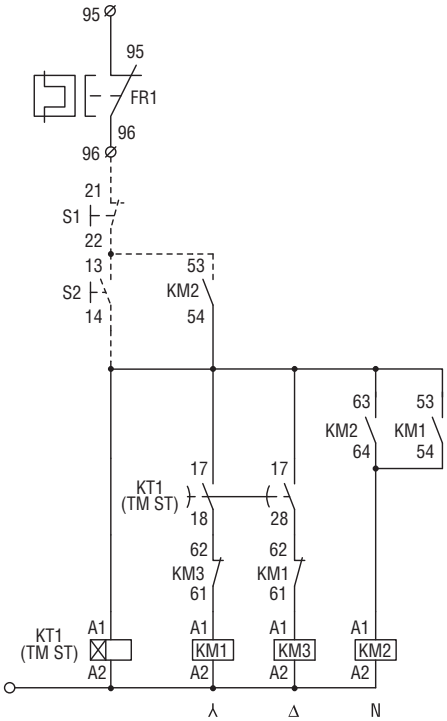
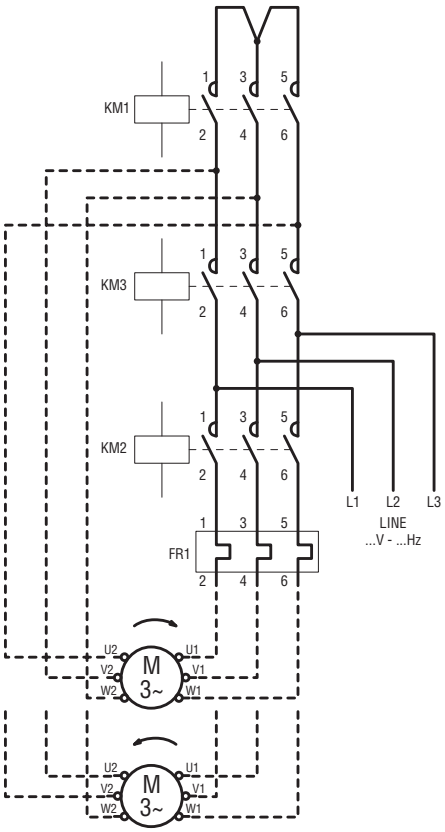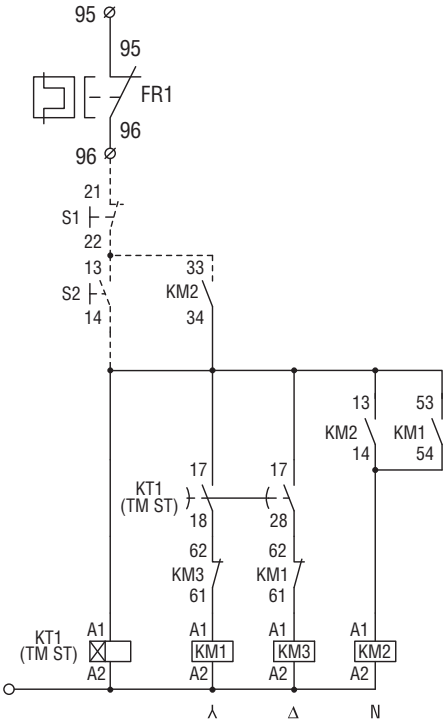
STAR-DELTA STARTERS, OPEN FRAME **NYF...**