FILE: P:\DEPTS\ENGR\PROD DOCS\RLW\RLW-002101

INDUCTANCE	WEIGHT (LBS)	LOSS (WATTS)
0.53mH	4.2	38.3

NO.	CHANGE DESCRIPTION	BY	DATE	C'K'D

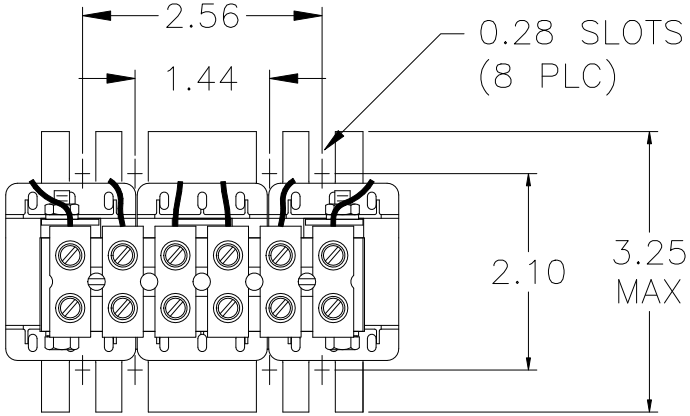

WIRE RANGE: 14–6AWG

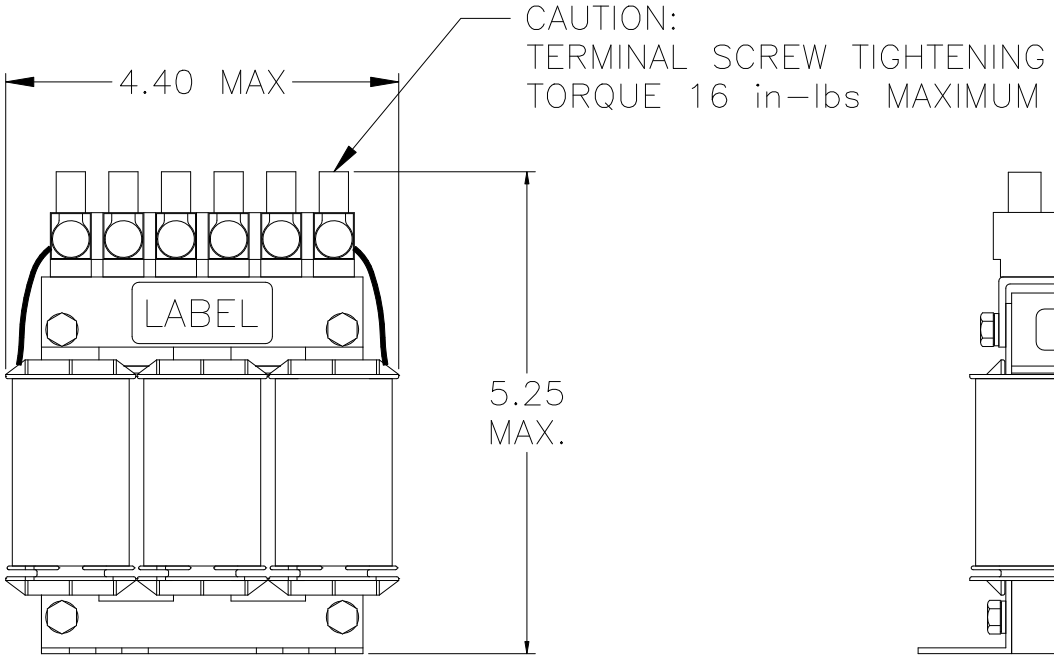

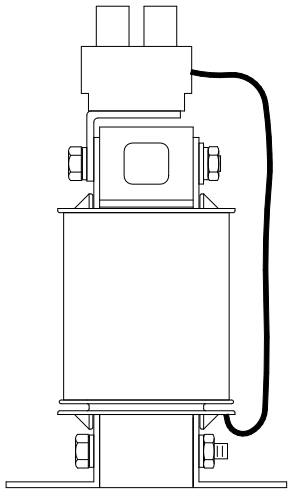

UNLESS OTHERWISE SPECIFIED, DIMENSIONS ARE IN INCHES [mm] AND TOLERANCES ARE:

DECI. FRAC.

ANGLES DRILLED HOLES

PART NAME: 3 PHASE REACTOR

DESCRIPTION: OUTLINE DIMENSIONS

FINISH:

MTE CORPORATION
MENOMONEE FALLS, WISCONSIN

CD RLW–002101 REV. 02

SCALE NTS	DATE 04/02/09	C'K'D
REF.	DR. BY RKT	APP'D