MURR ELEKTRONIK
stay connected

M12 male 0° /Push Pull RJ45, 45°, shielded

PUR 2x2xAWG22 shielded gn UL/CSA+dragchain 3m

Ethernet CAT5
The resistance to aggressive media should be individually tested for your application. Further details on request.
Male straight – male 90°
M12 – RJ45PP, 4-pole
D-coded
shielded
Push Pull
Transmission properties with channel transmission up to 100 m
Further cable lengths on request.
Plastic housings with good resistance against chemicals and oils.

Link to Product

Illustration

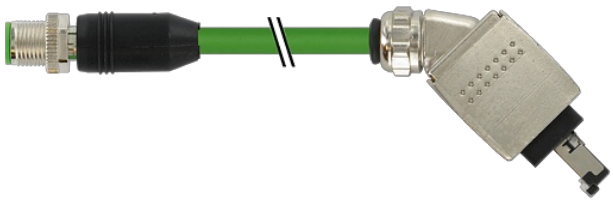

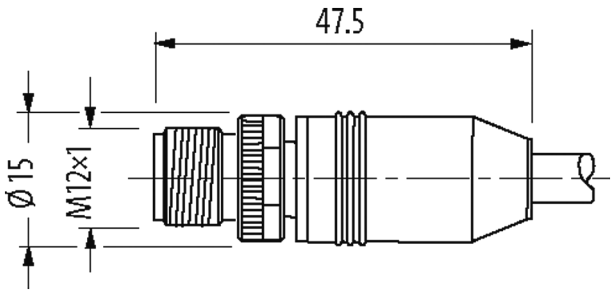

Product may differ from Image

Approvals

c UL us Listed *

* only for products with UL/CSA approved cable

More Info

EtherNet/IP

EtherCAT

PROFINET

Form

Form	44735

General data

Standards	DIN EN 61076-2-101 (M12)
Pollution Degree	3

Temperature range	-25...+85 °C, depending on cable quality
Cables	
No./diameter of wires	2× 2× 0.34 mm²
Wire isolation	PE (wh, ye, bl, or)
C-track properties	3 Mio.
Jacket Color	green
Material (jacket)	PUR (UL/CSA)
Outer Ø	6.7 mm ±5%
Bend radius (moving)	12× outer Ø
Temperature range (fixed)	-40...+80 °C
Temperature range (mobile)	-30...+70 °C
Cable identification	796
Approval (cable)	UL (AWM-Style 20233/11602), CSA; CE
Cable weight [g/m]	69,3
Material (wire)	Cu wire, bare
Resistor (core)	max. 55 Ω/km (20 °C)
Diameter (core)	2× 2× AWG22
Material (wire isolation)	PE
Wire-Ø incl. isolation	1.4 mm ±5%
Color/numbering of wires	wh, ye, bl, or
Shield	yes
	min. 85%
Material (jacket)	PUR
Outer-Ø (jacket)	6.7 mm ±5%
Color (jacket)	green
thermal resistance	flammwidrig nach UL 1581 Section 1060 (FT1), Section 1061 (cable flame), Section 1080 (VW-1) / IEC 60332-1-2
Nominal voltage	300 V
Temperature range (fixed)	-40...+80 °C
Temperature range (mobile)	-30...+70 °C
Bend radius (fixed)	5× outer Ø
Bend radius (moving)	12× outer Ø
No. of bending cycles (C-track)	max. 3 Mio. (25 °C)
Traversing distance (C-track)	max. 5 m (horizontal)
Travel speed (C-track)	max. 3.3 m/s
Acceleration (C-track)	max. 2 m/s²
Technical Data	
Operating voltage	max. 60 V DC
Operating voltage (only UL listed)	max. 30 V DC
Rated surge voltage	1.5 kV
Operating current per contact	max. 1.76 A
Material group	IEC 60664-1, category I
Transfer parameters	CAT5, Class D (ISO/IEC 11801:2002), (EN 50173-1)
Transfer rate	up to 100 Mbit/s full duplex
Coding	M12, D-coded
Locking of ports	Screw thread (M12×1 mm) recommended torque 0.6 Nm, self-securing
Compression gland	M12 (SW13)
Protection	IP65 and IP67 when plugged and screwed down (EN 60529)

Locking material	Zinc die casting, matte nickel plated
Material	PUR
suitable for corrugated tube (internal Ø)	without

Commercial data

country of origin	DE
customs tariff number	85444210
EAN	4048879468428
eClass	27061801
Packaging unit	1

Sketch

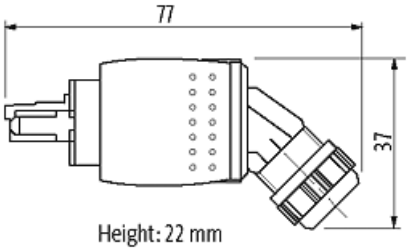

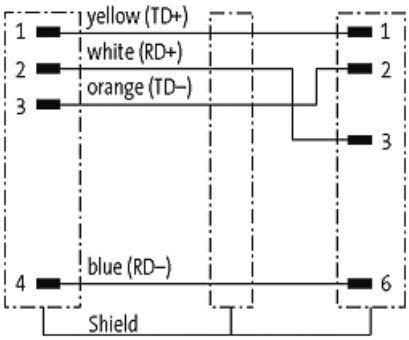

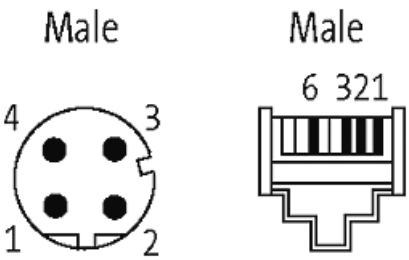

Product may differ from Image