Product data sheet
Characteristics

ATS01N232RT
soft starter for asynchronous motor - ATS01 - 32 A - 460..480 V

Main

Range of product	Altistart 01
Product or component type	Soft starter
Product destination	Asynchronous motors
Product specific application	Simple machine
Device short name	ATS01
Network number of phases	3 phases
[Us] rated supply voltage	460...480 V - 10...10 %
Motor power hp	20 hp 3 phases 460...480 V
IcL starter rating	32 A
Utilisation category	AC-53B EN/IEC 60947-4-2
Current consumption	160 A at nominal load
Type of start	Start with voltage ramp
Power dissipation in W	4.5 W at full load and at end of starting

Complementary

Assembly style	With heat sink
Function available	Integrated bypass
Supply voltage limits	414...528 V
Supply frequency	50...60 Hz - 5...5 %
Network frequency	47.5...63 Hz
Output voltage	<= power supply voltage
Control circuit voltage	Built into the starter
Starting time	Adjustable from 1 to 10 s
Deceleration time symb	Adjustable from 1 to 10 s
Starting torque	30...80 % of starting torque of motor connected directly on the line supply
Discrete input type	Logic LI1, LI2, BOOST stop, run and boost on start-up functions <= 8 mA 27 kOhm
Discrete input voltage	24...40 V

Disclaimer: This documentation is not intended as a substitute for and is not to be used for determining suitability or reliability of these products for specific user applications

Discrete output current	2 A DC-13 3 A AC-15
Discrete output type	Open collector logic LO1 end of starting signal Relay outputs R1A, R1C NO
Discrete output voltage	24 V 6...30 V open collector logic
Minimum switching current	10 mA 6 V DC relay outputs
Maximum switching current	2 A 250 V AC inductive cos phi = 0.5 20 ms relay outputs 2 A 30 V DC inductive cos phi = 0.5 20 ms relay outputs
Display type	1 LED green starter powered up 1 LED yellow nominal voltage reached
Tightening torque	0.5 N.m 1.9...2.5 N.m
Electrical connection	4 mm screw clamp terminal rigid 1 1...10 mm² AWG 8 power circuit Screw connector rigid 1 0.5...2.5 mm² AWG 14 control circuit 4 mm screw clamp terminal rigid 2 1...6 mm² AWG 10 power circuit Screw connector rigid 2 0.5...1 mm² AWG 17 control circuit Screw connector flexible with cable end 1 0.5...1.5 mm² AWG 16 control circuit 4 mm screw clamp terminal flexible without cable end 1 1.5...10 mm² AWG 8 power circuit Screw connector flexible without cable end 1 0.5...2.5 mm² AWG 14 control circuit 4 mm screw clamp terminal flexible with cable end 2 1...6 mm² AWG 10 power circuit 4 mm screw clamp terminal flexible without cable end 2 1.5...6 mm² AWG 10 power circuit Screw connector flexible without cable end 2 0.5...1.5 mm² AWG 16 control circuit
Marking	CE
Operating position	Vertical +/- 10 degree
Height	154 mm
Width	45 mm
Depth	131 mm
Product weight	0.56 kg
Compatibility code	ATS01N2

Environment

Electromagnetic compatibility	Damped oscillating waves level 3 IEC 61000-4-12 Electrostatic discharge level 3 IEC 61000-4-2 Immunity to electrical transients level 4 IEC 61000-4-4 Immunity to radiated radio-electrical interference level 3 IEC 61000-4-3 Voltage/Current impulse level 3 IEC 61000-4-5 Conducted and radiated emissions level B CISPR 11 Conducted and radiated emissions level B IEC 60947-4-2 EMC immunity EN 50082-2 Harmonics IEC 1000-3-2 Harmonics IEC 1000-3-4 Immunity to conducted interference caused by radio-electrical fields level 3 IEC 61000-4-6 Micro-cuts and voltage fluctuation IEC 61000-4-11 EMC immunity EN 50082-1
Standards	EN/IEC 60947-4-2
Product certifications	B44.1-96/ASME A17.5 for starter wired to the motor delta terminal CCC CSA C-Tick GOST UL
IP degree of protection	IP20
Pollution degree	2 EN/IEC 60947-4-2
Vibration resistance	1.5 mm peak to peak 3...13 Hz EN/IEC 60068-2-6 1 gn 13...150 Hz EN/IEC 60068-2-6
Shock resistance	15 gn 11 ms EN/IEC 60068-2-27
Relative humidity	5...95 % without condensation or dripping water EN/IEC 60068-2-3
Ambient air temperature for operation	-10...40 °C without derating 40...50 °C with current derating of 2 % per °C
Ambient air temperature for storage	-25...70 °C EN/IEC 60947-4-2
Operating altitude	<= 1000 m without derating > 1000 m with current derating of 2.2 % per additional 100 m

Life Is On Schneider Electric

Contractual warranty

Warranty period	18 months

ATS01N232RT

Dimensions

Mounting on Symetrical (35 mm) Rail

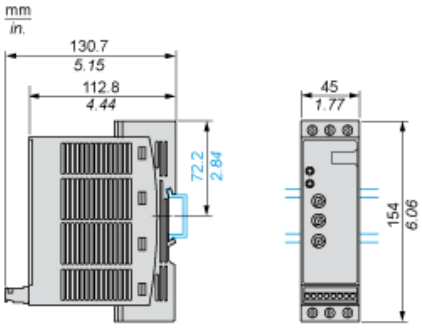

Screw Fixing

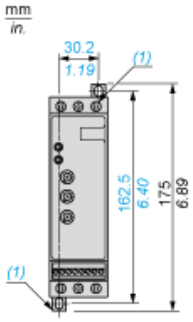

(1) Retractable fixings

ATS01N232RT

Example of Manual Control

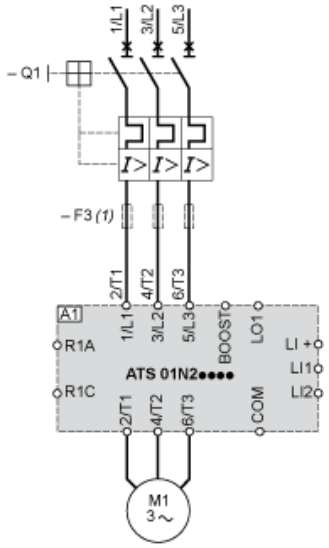

A1 : Soft start/soft stop unit
(1) For type 2 coordination
Q1 : Motor circuit-breaker
F3 : 3 fast-acting fuses

Function Diagram

2-wire Control with Deceleration

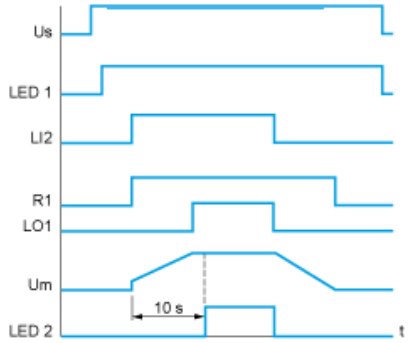

Us : Power supply voltage
LED 1 Green LED
LI2 : Logic input
R1 : Relay output
LO1 : Logic output
LED 2 Yellow LED

3-wire Control with Deceleration

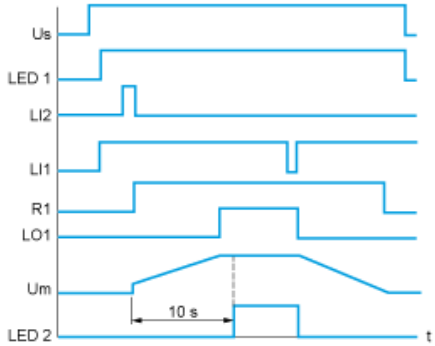

Us : Power supply voltage
LED 1 Green LED
LI2, LI1 Logic inputs
R1 : Relay output
LO1 : Logic output
Um : Motor voltage
LED 2 Yellow LED