Data sheet | Item number: 2091-1176/200-000

1-conductor THR female header; 1.0 mm Ø solder pin; straight; 1.5 mm²; Pin spacing 3.5 mm; 6-pole

2091-1176/200-000

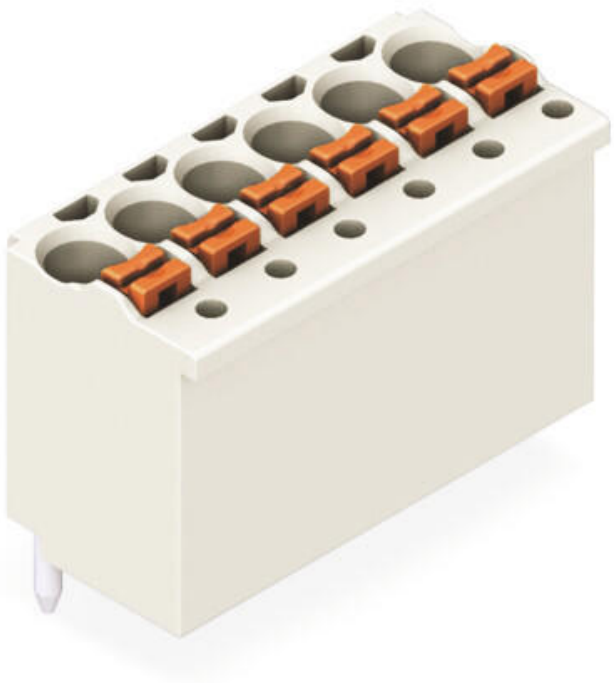

RoHS ✓ Compliant

BOMcheck.net

Color:

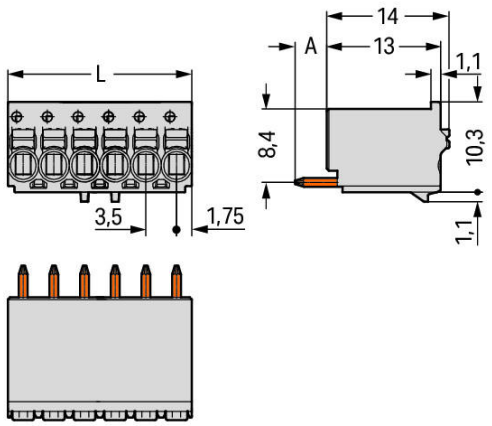

L = (pole number x pin spacing)

A = 3.6 mm THT solder pin

A = 2.4 mm THR solder pin

Item description

- Universal connection for all conductor types
- Simple, push-in termination of solid and ferruled conductors
- Easy-to-use design does not require specialty tools
- Ability to wire while mated or unmated
- Integrated test ports for testing parallel to conductor entry
- Factory-installed, straight or angled solder pins allow horizontal or vertical mounting to the PCB

Safety information 1:

The **picoMAX® pluggable connection system** is designed without breaking capacity for compliance with DIN EN 61984. When used as intended, MCS Connectors shall not be connected/disconnected when live or under load. The circuit design should ensure header pins, which can be touched, are not live when unmated.

Data
Electrical data

Ratings per IEC/EN 60664-1

Rated voltage (III / 3)	160 V
Rated impulse voltage (III / 3)	2.5 kV
Rated voltage (III / 2)	160 V
Rated impulse voltage (III / 2)	2.5 kV
Rated voltage (II / 2)	320 V
Rated impulse voltage (II / 2)	2.5 kV
Rated current	10 A

Approvals per UL 1059

Rated voltage UL (Use Group B)	300 V
Rated current UL (Use Group B)	10 A
Rated voltage UL (Use Group D)	300 V
Rated current UL (Use Group D)	10 A

Connection data

Connection technology	Push-in CAGE CLAMP®
Actuation type	Push-button
Solid conductor	0.2 … 1.5 mm² / 24 … 14 AWG
Fine-stranded conductor	0.2 … 1.5 mm² / 24 … 14 AWG
Fine-stranded conductor with ferrule with plastic collar	0.25 … 0.75 mm²
Fine-stranded conductor with ferrule without plastic collar	0.25 … 1.5 mm²
Strip length	8 … 9 mm / 0.31 … 0.35 inch
Conductor entry angle to the PCB	90 °
No. of poles	6
Total number of connection points	6
Total number of potentials	6
Number of connection types	1
Number of levels	1

Geometrical Data

Pin spacing	3.5 mm / 0.138 inch
Width	21 mm / 0.827 inch
Height	14 mm / 0.551 inch
Depth	11.4 mm / 0.449 inch
Solder pin length	2.4 mm
Solder pin diameter	1 mm

Plug connection

Contact type (pluggable connector)	Female connector/socket
Connector connection type	for PCBs
Mismating protection	No
Mating direction to the PCB	90 °

PCB contact

PCB contact	THR

Material Data

Color	light gray
Material group	I
Insulating material	Polyphthalamide (PPA GF)
Flammability class per UL94	V0
Clamping spring material	Chrome nickel spring steel (CrNi)
Contact material	Electrolytic copper (E_{Cu})
Contact plating	tin-plated
Fire load	0.063 MJ
Weight	3.152 g

Environmental Requirements

Limit temperature range	-60 … +100 °C

Commercial data

Country of origin	DE
GTIN	4050821395898
Customs Tariff No.	85366990990

Approvals / Certificates

Country specific Approvals

Logo	Approval	Additional Approval Text	Certificate name
	CB DEKRA Certification B.V.	IEC 61984	NL-49736
	KEMA/KEUR DEKRA Certification B.V.	EN 61984	71-102260

UL-Approvals

Logo	Approval	Additional Approval Text	Certificate name
	UR Underwriters Laboratories Inc.	UL 1059	E45172
	UR Underwriters Laboratories Inc.	UL 1977	20170428-E45171
	UR Underwriters Laboratories Inc.	UL 1977	E45171
	UR Underwriters Laboratories Inc.	UL 1059	E45172

Compatible products

tools

	Item no.: 210-719 Operating tool with partially insulated shaft; Type 1, blade (2.5 x 0.4) mm	210-719

check

	Item no.: 735-500 Test pin; 1 mm Ø; with solder connection for test wire	735-500

Coding

	Item no.: 2091-1610 Coding key carrier; suitable for 3.5 mm pin spacing	2091-1610

Downloads

Documentation

Additional Information

	pdf 3.6 MB	Download

CAD/CAE - Smart Data

CAD data

3D Download 2091-1176/200-000	URL	Download

Product family

picoMAX eCOM
Show all products from the family

Subject to changes.