Current transformer disconnect terminal block

selos

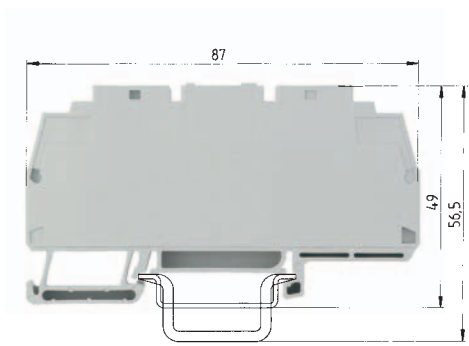

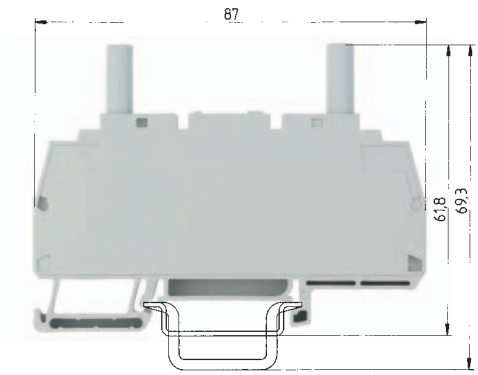

		WK6 TK/35			WK6 TK P3/35		
		fine-stranded	solid	V	fine-stranded	solid	V
EN 60 947-7-1/DIN VDE 0611 T1		0.5 – 6 mm²	0.5 – 10 mm²	400 V/6 kV/3	0.5 – 6 mm²	0.5 – 10 mm²	400 V/6 kV/3
UL ratings	field/factory wiring	No. 20-8 AWG		600 V	No. 20-8 AWG		600 V
CSA ratings		No. 20-8 AWG		300 V	No. 20-8 AWG		300 V
Width	Wire strip length	8 mm			8 mm		
Approvals							

		Type	Part No.	Std. Pack	Type	Part No.	Std. Pack
Current transformer disconnect terminal		WK6 TK/35	56.106.0553.0	50			
Current transformer disconnect terminal with mounted test bolts					WK6 TK P3/35	56.106.0653.0	50
Accessories							
1. Mounting rail TS 35, DIN rail 7.5 mm high	L = 2 m						
Mounting rail TS 35, DIN rail, 15 mm high	L = 2 m	35 x 27 x 7,5 EN 60715	98.300.0000.0	1	35 x 27 x 7,5 EN 60715	98.300.0000.0	1
Mounting rail TS 32, G rail	L = 2 m	35 x 24 x 15 EN 60715	98.360.0000.0	1	35 x 24 x 15 EN 60715	98.360.0000.0	1
2. End clamp with U-foot	10 mm wide						
End clamp TS 35 with screw	8 mm wide	WE 1/U	Z5.523.5753.0	100	WE 1/U	Z5.523.5753.0	100
End clamp TS32 with screw	7.5 mm wide	9708/2 S 35	Z5.522.8553.0	100	9708/2 S 35	Z5.522.8553.0	100
3. Disconnect locking device							
4. Sliding short-circuit slide		SP WK6 TK	05.563.5453.0	50	SP WK6 TK	05.563.5453.0	50
insulated	2 pole						
	3 pole	IVS WK6 TK-2	Z7.212.2227.0	50	IVS WK6 TK-2	Z7.212.2227.0	50
	4 pole	IVS WK6 TK-3	Z7.212.2327.0	50	IVS WK6 TK-3	Z7.212.2327.0	50
5. Jumper bar with screws, E-Cu		IVS WK6 TK-4	Z7.212.2427.0	50	IVS WK6 TK-4	Z7.212.2427.0	50
insulated	2 pole						
	3 pole	IVB WK6 TK-2	Z7.212.1227.0	50	IVB WK6 TK-2	Z7.212.1227.0	50
	4 pole	IVB WK6 TK-3	Z7.212.1327.0	50	IVB WK6 TK-3	Z7.212.1327.0	50
	5 pole	IVB WK6 TK-4	Z7.212.1427.0	50	IVB WK6 TK-4	Z7.212.1427.0	50
	10 pole	IVB WK6 TK-5	Z7.212.1527.0	50	IVB WK6 TK-5	Z7.212.1527.0	50
6. Test socket	gray	IVB WK6 TK-10	Z7.212.2027.0	50	IVB WK6 TK-10	Z7.212.2027.0	50
	violet	SB 4 GRAU	05.511.2953.0	10	SB 4 GRAU	05.511.2953.0	10
	green	SB 4 VIOLETT	05.511.2953.9	10	SB 4 VIOLETT	05.511.2953.9	10
	yellow	SB 4 GRÜN	05.511.2953.7	10	SB 4 GRÜN	05.511.2953.7	10
	blue	SB 4 GELB	05.511.2953.8	10	SB 4 GELB	05.511.2953.8	10
7. Partition		SB 4 BLAU	05.511.2953.6	10	SB 4 BLAU	05.511.2953.6	10
8. Intermediate plate	2 mm thick	TW 6 TK	07.312.0453.0	10	TW 6 TK	07.312.0453.0	10
		ZP 6 TK	07.312.9953.0	10	ZP 6 TK	07.312.9953.0	10

For more accessories see pages 216-229 and 238-243
For marking systems see pages 230-237

Subject to change without further notice